HAWI | ES420

Mario Ferrarini | 2024

HAWI

Mario Ferrarini | 2024

The collaboration between Lapalma and Mario Ferrarini continues, under a lucky star, as exemplified by the expansion of the HAWI collection, first launched at the Salone del Mobile 2024. Characterized by an essential and timeless aesthetic, in line with other proposals in the Lapalma catalog, HAWI presents an interesting twist given by the lively counterpoint between the solidity of the structure and the graceful backrest which, while maintaining continuity with it, lightens in its development. Presented in 2024 as a seat, stackable and extremely versatile, the collection in 2025 expands by adding the stool, available in two heights.

HAWI

Mario Ferrarini | 2024

| ES420 4-legged stackable

Stackable chair with powder-coated steel frame and polypropylene backrest and seat in various colours. Nylon feet with integrated felt.

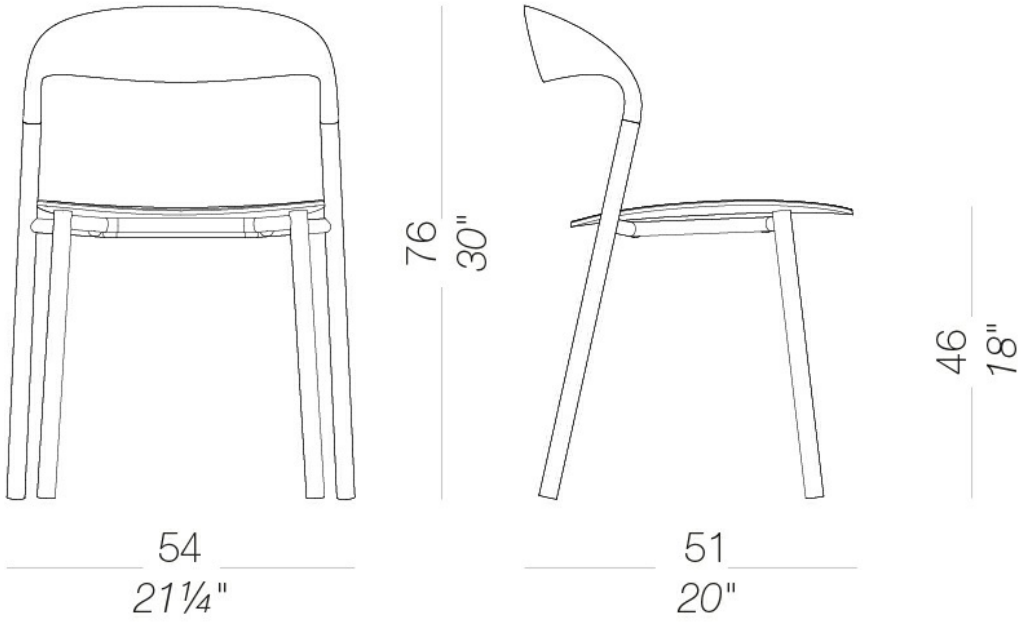

HAWI | ES420

Mario Ferrarini | 2024

seat/back

plastics
polypropylene
16 Colors

frame

powder coating
black
1 Colors

powder coating
white
1 Colors

powder coating
mattone | outdoor
1 Colors

powder coating
celeste | outdoor
1 Colors

powder coating
perla | outdoor
1 Colors

powder coating
tortora | outdoor
1 Colors

powder coating
oliva
1 Colors

powder coating
pistacchio | outdoor
1 Colors

HAWI | ES420

Mario Ferrarini | 2024

consult the porfolio for the range of colors, fabrics, eco-leather, soft-leather.

use and maintenance instructions
Clean all parts in wood, leather, fabric and metal with a damp cloth or a diluted neutral cleaner. Do not use cleaners with alcohol, bleach, solvent or abrasive products. Any liquid spilt on the product must be wiped up immediately.When lifting or moving the product, hold it on the structure and not under the seat. The product should not be subjected to unbalanced weights, as it is designed for a proper rest on the foothold (on four legs or on the base). Our company relieves from any responsibility in case of damage caused to fragile floors. Avoid any improper use of the product: do not step on the product, on the footrest or on the armrests. Avoid any movements that could compromise the proper functionality of the product or the safety of the users.Wood and leather, being natural materials, could be easily damaged. Small impurities or imperfections are within quality standard range.Do not expose the product to weather conditions or atmospheric agents, nor to heat sources over 40°C. Also products for outdoor use could be afflicted by atmospheric agents. The product could undergo possible exterior changes due to particular exposure to heat, humidity and saltiness. An appropriate and frequent maintenance and cleaning of the product enhances its durability. The product could change colour and shade, if exposed to direct sunlight. Maintenance has to be carried out by experienced staff. Dispose of the package only after assembling the product, in order to avoid the loss of ironmongery and components. Once the product has been dismantled, the product itself or its components must be given to the public garbage disposal system, according to the legislation in force.