AARON | S436

Pio & Tito Toso | 2020

AARON

Pio & Tito Toso | 2020

It was born generous, attentive and dynamic. You could call it a friend, one of the family. It was born double, like the double "A" in its name. AARON, a stool and a table all in one. It is an elegant and functional solution for all contexts, reducing space and valuing privacy. It has an embracing seat and a metal core which gives rise to a column that becomes a swivel tabletop. At different heights, with or without a footrest, AARON is the ideal solution for all work, meeting and relaxation needs. The designers who started this small revolution in the world of Lapalma stools are the Venetian brothers PIO&TITOTOSO. A story of complicity and understanding. A dual story. A great idea.

AARON

Pio & Tito Toso | 2020

archiproducts DESIGN AWARDS WINNER 2020

| S436 stool with swivel table top h52

Stool with base in powder coated steel. Swivel seat upholstered with fi re retardant moulded foam covered with fabric, ecoleather or leather and off-centre pivoting tablet. Felt under the base. Also available with small base for floor fixing.

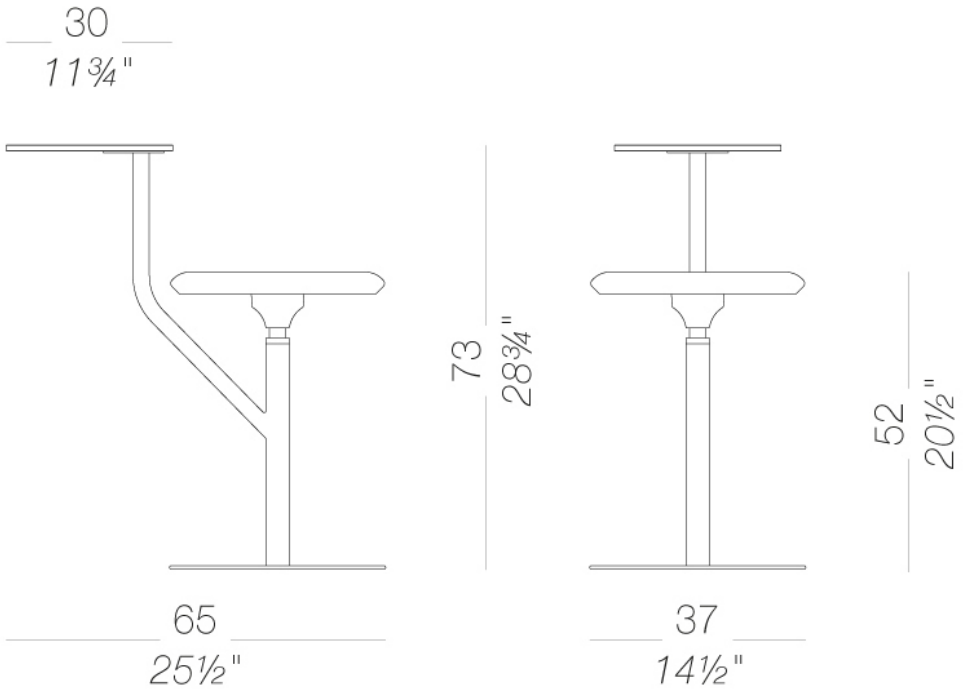

AARON | S436

Pio & Tito Toso | 2020

frame

metal
powder coating
16 Colors

seat

fabric
Main Line Flax - Grade. B
57 Colors

fabric
Blazer - Grade. C
77 Colors

fabric
Chili - Grade. A
47 Colors

fabric
Umber - Grade. B
36 Colors

fabric
Nobel - Grade. C
30 Colors

fabric
Naveli - Grade. C
24 Colors

fabric
Fiocco - Grade. B
34 Colors

fabric
Atrium - Grade. C
16 Colors

fabric
Panama - Grade. A
48 Colors

fabric
Sorrento - Grade. B
22 Colors

wood
natural ash
1 Colors

fabric
Hallingdal 65 - Grade C
58 Colors

fabric
Canvas 2 - Grade C
45 Colors

fabric
Steelcut Trio 3 - Grade D
54 Colors

fabric
Remix 3 - Grade C
72 Colors

fabric
Fiord 2 - Grade C
39 Colors

fabric
Divina MD - Grade D
27 Colors

fabric
Divina Melange 3 - Grade D
38 Colors

fabric
Tonica 2 - Grade C
39 Colors

fabric
Medley - Grade A
37 Colors

fabric
Maya - Grade A
43 Colors

fabric
Jet - Grade A
66 Colors

fabric
Capture - Grade B
60 Colors

fabric
Crisp - Grade B
40 Colors

fabric
Iris - Grade B
34 Colors

fabric
Steelcut 3 - Grade D
40 Colors

ecoleather
Valencia - Grade B
72 Colors

fabric
Grain - Grade. B
50 Colors

fabric
Re-wool - Grade C
25 Colors

AARON | S436

Pio & Tito Toso | 2020

consult the porfolio for the range of colors, fabrics, eco-leather, soft-leather.

use and maintenance instructions
Clean all parts in wood, leather, fabric and metal with a damp cloth or a diluted neutral cleaner. Do not use cleaners with alcohol, bleach, solvent or abrasive products. Any liquid spilt on the product must be wiped up immediately.When lifting or moving the product, hold it on the structure and not under the seat. The product should not be subjected to unbalanced weights, as it is designed for a proper rest on the foothold (on four legs or on the base). Our company relieves from any responsibility in case of damage caused to fragile floors. Avoid any improper use of the product: do not step on the product, on the footrest or on the armrests. Avoid any movements that could compromise the proper functionality of the product or the safety of the users.Wood and leather, being natural materials, could be easily damaged. Small impurities or imperfections are within quality standard range.Do not expose the product to weather conditions or atmospheric agents, nor to heat sources over 40°C. Also products for outdoor use could be afflicted by atmospheric agents. The product could undergo possible exterior changes due to particular exposure to heat, humidity and saltiness. An appropriate and frequent maintenance and cleaning of the product enhances its durability. The product could change colour and shade, if exposed to direct sunlight. Maintenance has to be carried out by experienced staff. Dispose of the package only after assembling the product, in order to avoid the loss of ironmongery and components. Once the product has been dismantled, the product itself or its components must be given to the public garbage disposal system, according to the legislation in force.