FLOS

FS003196 White

Smithfield Ceiling Pro

Designed by Jasper Morrison, 2009

45W - 2732lm - 3000K - CRI> 95

Ceiling-mounted lamp emitting direct light. Features an aluminium body with an injection-moulded opalescent methacrylate diffuser. Steel ceiling and wall attachment. LED module integrated available in 2700K and 3000K colour temperatures; 3500K available upon request. Dimmable through Dali or Push control options.

Part of the Smithfield family by Jasper Morrison, Smithfield Ceiling draws inspiration from the industrial lighting of London's historic Smithfield Market. True to Morrison's Super Normal design philosophy, it balances utilitarian character with refined simplicity. The ceiling-mounted version retains the generous form of the suspension lamp in a clean, space-conscious solution. With its combination of technical performance and understated presence, Smithfield Ceiling is equally suited to both domestic and commercial environments.

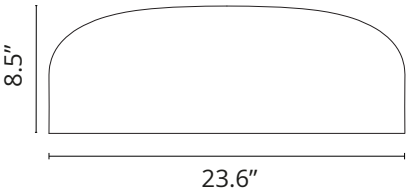

Are you a professional and your project needs consulting and support?

BOOK AN APPOINTMENT

Download

Family spec sheet	ZIP
Mounting instructions	PDF

Main specifications

EAN	8059607010341
Mounting	Ceiling
Environments	Indoor dry location
Light Source Type	LED
Light sources included	Yes
LED type	LED Module
Power (W)	45
System power (W)	45
System flux (lm)	2732

Physical

Color	White
Length (in)	23.62
Net weight (lb)	12.68
Gross weight (lb)	21.6
Package height (in)	12.2
Package width (in)	27.95
Package length (in)	27.95
Package volume (in)	9536.22
IP internal	20

Ecodesign and Energy Labelling

This product contains a light source of energy efficiency class **F**

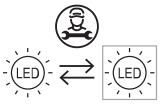

Replaceable (LED only) light source by a professional

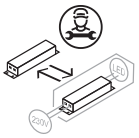

Replaceable control gear by a professional

©2026 Flos - P.IVA 00290820174 - 9/3/2026

In our constantly evolving world and business, technical upgrades happen every day. This means all product specifications and data are subject to change without warning in order t improve reliability, function, performance or otherwise. We make every effort to ensure the accuracy of our product images, however due to different lighting and screens used for viewing, the colours may vary. Images are indicative of the quality and style of the product but may not represent the precise details of the product you receive. This is because we are constantly working to make improvements. For aesthetic reasons, cables and/or electrical elements are often not shown. Refer to technical data sheets for all technical data. Images and colours are not part of any contract or warranty in any way.

IP
20

Photometric

Lighting type	Direct
Light distribution	Roto symmetric
CCT (K)	3000
CRI>	95
Extreme cut off	No

Electrical

Insulation class	I
Frequency (Hz)	50/60
Main voltage (Vac)	120
Driver	Integrated
Dimmable	Yes
Dimming type	Dimmable 0-10V
Dimming interface	Remote Dimmable (Dimmer Not Included)
Batteries inside	No

Notes

Dimmable 0-10V (10% up to 100% for 120V and 25% up to 100% for 277V).
3500K customised product. Please consult the Sales Department for delivery times.
Class 2

©2026 Flos - P.IVA 00290820174 - 9/3/2026

In our constantly evolving world and business, technical upgrades happen every day. This means all product specifications and data are subject to change without warning in order t improve reliability, function, performance or otherwise. We make every effort to ensure the accuracy of our product images, however due to different lighting and screens used for viewing, the colours may vary. Images are indicative of the quality and style of the product but may not represent the precise details of the product you receive. This is because we are constantly working to make improvements. For aesthetic reasons, cables and/or electrical elements are often not shown. Refer to technical data sheets for all technical data. Images and colours are not part of any contract or warranty in any way.

Spare Parts

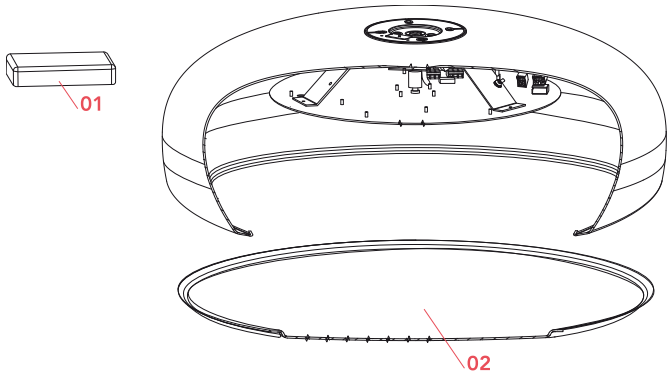

©2026 Flos - P.IVA 00290820174 - 9/3/2026

In our constantly evolving world and business, technical upgrades happen every day. This means all product specifications and data are subject to change without warning in order t improve reliability, function, performance or otherwise. We make every effort to ensure the accuracy of our product images, however due to different lighting and screens used for viewing, the colours may vary. Images are indicative of the quality and style of the product but may not represent the precise details of the product you receive. This is because we are constantly working to make improvements. For aesthetic reasons, cables and/or electrical elements are often not shown. Refer to technical data sheets for all technical data. Images and colours are not part of any contract or warranty in any way.

FLOS

FU137009 White

Smithfield Ceiling

Designed by Jasper Morrison, 2009

Incandescent - 4 x 60W

Ceiling-mounted lamp emitting direct light. Features an aluminium body with an injection-moulded opalescent methacrylate diffuser. Steel ceiling and wall attachment.

Part of the Smithfield family by Jasper Morrison, Smithfield Ceiling draws inspiration from the industrial lighting of London's historic Smithfield Market. True to Morrison's Super Normal design philosophy, it balances utilitarian character with refined simplicity. The ceiling-mounted version retains the generous form of the suspension lamp in a clean, space-conscious solution. With its combination of technical performance and understated presence, Smithfield Ceiling is equally suited to both domestic and commercial environments.

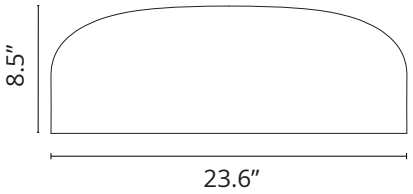

Are you a professional and your project needs consulting and support?

BOOK AN APPOINTMENT

Download

Family spec sheet	ZIP
Mounting instructions	PDF

Main specifications

EAN	8059607031469
Mounting	Ceiling
Environments	Indoor dry location
Light Source Type	Bulb
Light sources included	No
Lamp category	Incandescent
Lamp type	A
Lamp holders	E26
Number of lamps	4
Power (W)	60
System power (W)	240

Physical

Color	White
Length (in)	23.62
Net weight (lb)	9.92
Gross weight (lb)	19.84
Package height (in)	27.95
Package width (in)	12.2
Package length (in)	27.95
Package volume (in)	9536.22
IP internal	20

©2026 Flos - P.IVA 00290820174 - 9/3/2026

In our constantly evolving world and business, technical upgrades happen every day. This means all product specifications and data are subject to change without warning in order t improve reliability, function, performance or otherwise. We make every effort to ensure the accuracy of our product images, however due to different lighting and screens used for viewing, the colours may vary. Images are indicative of the quality and style of the product but may not represent the precise details of the product you receive. This is because we are constantly working to make improvements. For aesthetic reasons, cables and/or electrical elements are often not shown. Refer to technical data sheets for all technical data. Images and colours are not part of any contract or warranty in any way.

IP
20

Photometric

Lighting type	Direct
Light distribution	Symmetric
Extreme cut off	No

Electrical

Insulation class	I
Frequency (Hz)	60
Main voltage (Vac)	120
Dimmable	Yes
Dimming interface	Remote Dimmable (Dimmer Not Included)
Batteries inside	No

©2026 Flos - P.IVA 00290820174 - 9/3/2026

In our constantly evolving world and business, technical upgrades happen every day. This means all product specifications and data are subject to change without warning in order t improve reliability, function, performance or otherwise. We make every effort to ensure the accuracy of our product images, however due to different lighting and screens used for viewing, the colours may vary. Images are indicative of the quality and style of the product but may not represent the precise details of the product you receive. This is because we are constantly working to make improvements. For aesthetic reasons, cables and/or electrical elements are often not shown. Refer to technical data sheets for all technical data. Images and colours are not part of any contract or warranty in any way.

Bulbs

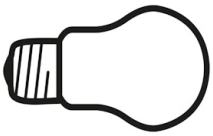

NOT INCLUDED

RF34656

9W E26 A19 Led Lamp

©2026 Flos - P.IVA 00290820174 - 9/3/2026

In our constantly evolving world and business, technical upgrades happen every day. This means all product specifications and data are subject to change without warning in order t improve reliability, function, performance or otherwise. We make every effort to ensure the accuracy of our product images, however due to different lighting and screens used for viewing, the colours may vary. Images are indicative of the quality and style of the product but may not represent the precise details of the product you receive. This is because we are constantly working to make improvements. For aesthetic reasons, cables and/or electrical elements are often not shown. Refer to technical data sheets for all technical data. Images and colours are not part of any contract or warranty in any way.

Spare Parts

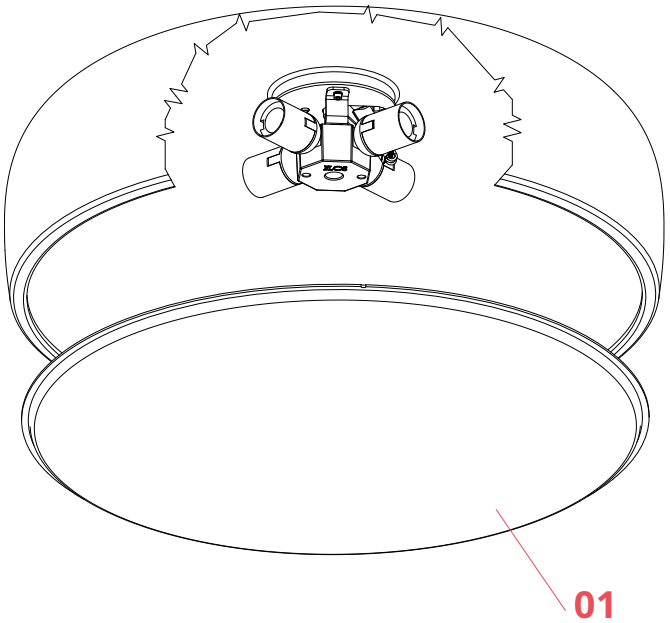

01.	Smithfield Methacrylate diffuser	RF19022

©2026 Flos - P.IVA 00290820174 - 9/3/2026

In our constantly evolving world and business, technical upgrades happen every day. This means all product specifications and data are subject to change without warning in order t improve reliability, function, performance or otherwise. We make every effort to ensure the accuracy of our product images, however due to different lighting and screens used for viewing, the colours may vary. Images are indicative of the quality and style of the product but may not represent the precise details of the product you receive. This is because we are constantly working to make improvements. For aesthetic reasons, cables and/or electrical elements are often not shown. Refer to technical data sheets for all technical data. Images and colours are not part of any contract or warranty in any way.

RF19022

Smithfield Methacrylate diffuser

©2026 Flos - P.IVA 00290820174 - 9/3/2026

In our constantly evolving world and business, technical upgrades happen every day. This means all product specifications and data are subject to change without warning in order t improve reliability, function, performance or otherwise. We make every effort to ensure the accuracy of our product images, however due to different lighting and screens used for viewing, the colours may vary. Images are indicative of the quality and style of the product but may not represent the precise details of the product you receive. This is because we are constantly working to make improvements. For aesthetic reasons, cables and/or electrical elements are often not shown. Refer to technical data sheets for all technical data. Images and colours are not part of any contract or warranty in any way.