FLOS

03.5900.14.QF Black/White

Kap 80 Surface Round Mains Dimming Optic Medium

Designed by FLOS Architectural, 2017

Luminaire for mounting on the ceiling with LED light source. Power source incorporated into luminaire body. Splice Box not included it has to be Always supply by FLOS

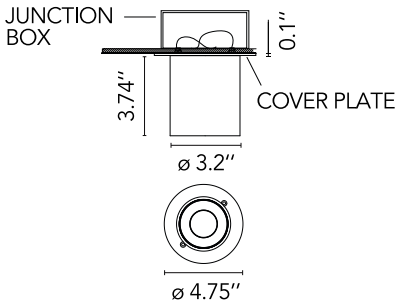

Are you a professional and your project needs consulting and support?

BOOK AN APPOINTMENT

Main specifications

Mounting	Ceiling surface
Environments	Indoor dry location
Light Source Type	LED
Light sources included	Yes
LED type	LED array
Lamp category	LED
Number of lamps	1
Power (W)	9.2
Source flux (lm)	1011
System flux (lm)	606

Physical

Color	Black/White
Trim	No
Orientation	Fixed
Net weight (lb)	1.35
Package volume (in)	428
IP internal	20

Download

Family spec sheet	ZIP
Mounting instructions	PDF

Photometric Files

LDT / IES	ZIP

©2022 Flos - P.IVA 00290820174 - 11/15/2025

In our constantly evolving world and business, technical upgrades happen every day. This means all product specifications and data are subject to change without warning in order t improve reliability, function, performance or otherwise. We make every effort to ensure the accuracy of our product images, however due to different lighting and screens used for viewing, the colours may vary. Images are indicative of the quality and style of the product but may not represent the precise details of the product you receive. This is because we are constantly working to make improvements. For aesthetic reasons, cables and/or electrical elements are often not shown. Refer to technical data sheets for all technical data. Images and colours are not part of any contract or warranty in any way.

Schematic light drawing

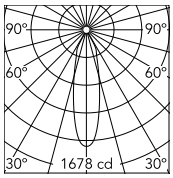

Luminous flux luminaire
566 lm

Beam Angle: 26°

h(m)	E(lx)	D(m)
1	1678	0.46
2	420	0.92
3	186	1.39
4	105	1.85
5	67	2.31

Photometric

Lighting type	Direct
Light distribution	Symmetric
CCT (K)	2700
CRI>	90
McAdam steps (SDCM)	3
Beam angle C0-180 (°)	26
Beam angle C90-270 (°)	26
UGR_L	<19

Electrical

Insulation class	III
Main voltage (Vac)	120-277
Forward voltage (V)	18.4
LED current (mA)	500
Driver	Integrated
Dimming type	Mains Cut Dimming

Notes

Integral LED. COB is not field replaceable. Softening diffuser accessory provided. IP54 – Suitable for Damp locations. ELV dimming. Cover plate for standard Junction Box included. Painted to match exterior fixture finish. May be removed and field painted to match ceiling finish. Compatible with most LUTRON dimmers. Consult with factory for other tested dimmers.

©2022 Flos - P.IVA 00290820174 - 11/15/2025

In our constantly evolving world and business, technical upgrades happen every day. This means all product specifications and data are subject to change without warning in order t improve reliability, function, performance or otherwise. We make every effort to ensure the accuracy of our product images, however due to different lighting and screens used for viewing, the colours may vary. Images are indicative of the quality and style of the product but may not represent the precise details of the product you receive. This is because we are constantly working to make improvements. For aesthetic reasons, cables and/or electrical elements are often not shown. Refer to technical data sheets for all technical data. Images and colours are not part of any contract or warranty in any way.

FLOS

03.5910.14.QF Black/White

Kap 80 Surface Square Mains Dimming Optic Medium

Designed by FLOS Architectural, 2017

Luminaire for mounting on the ceiling with LED light source. Power source incorporated into luminaire body. Splice Box not included it has to be Always supply by FLOS

Are you a professional and your project needs consulting and support?

BOOK AN APPOINTMENT

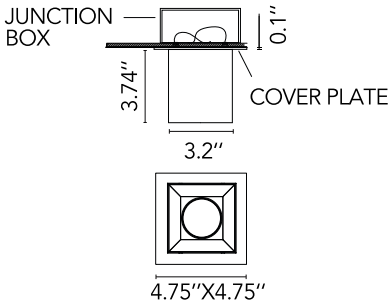

Main specifications

Mounting	Ceiling surface
Environments	Indoor dry location
Light Source Type	LED
Light sources included	Yes
LED type	LED array
Lamp category	LED
Number of lamps	1
Power (W)	9.2
Source flux (lm)	1011
System flux (lm)	615

Physical

Color	Black/White
Trim	No
Orientation	Fixed
Net weight (lb)	1.35
Package volume (in)	428
IP internal	20

Download

Family spec sheet ZIP

Mounting instructions PDF

Photometric Files

LDT / IES ZIP

©2022 Flos - P.IVA 00290820174 - 11/15/2025

In our constantly evolving world and business, technical upgrades happen every day. This means all product specifications and data are subject to change without warning in order t improve reliability, function, performance or otherwise. We make every effort to ensure the accuracy of our product images, however due to different lighting and screens used for viewing, the colours may vary. Images are indicative of the quality and style of the product but may not represent the precise details of the product you receive. This is because we are constantly working to make improvements. For aesthetic reasons, cables and/or electrical elements are often not shown. Refer to technical data sheets for all technical data. Images and colours are not part of any contract or warranty in any way.

Schematic light drawing

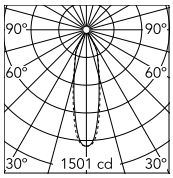

Luminous flux luminaire
575 lm

Beam Angle: 27°

h(m)	E(lx)	D(m)
1	1501	0.45
2	375	0.90
3	167	1.34
4	94	1.79
5	60	2.24

Photometric

Lighting type	Direct
Light distribution	Symmetric
CCT (K)	2700
CRI>	90
McAdam steps (SDCM)	3
Beam angle C0-180 (°)	25
Beam angle C90-270 (°)	25
UGR_L	<19

Electrical

Insulation class	III
Main voltage (Vac)	120-277
Forward voltage (V)	18.4
LED current (mA)	500
Driver	Integrated
Dimming type	Mains Cut Dimming

Notes

Integral LED. COB is not field replaceable. Softening diffuser accessory provided. IP54 – Suitable for Damp locations. ELV dimming. Cover plate for standard Junction Box included. Painted to match exterior fixture finish. May be removed and field painted to match ceiling finish. Compatible with most LUTRON dimmers. Consult with factory for other tested dimmers.

©2022 Flos - P.IVA 00290820174 - 11/15/2025

In our constantly evolving world and business, technical upgrades happen every day. This means all product specifications and data are subject to change without warning in order t improve reliability, function, performance or otherwise. We make every effort to ensure the accuracy of our product images, however due to different lighting and screens used for viewing, the colours may vary. Images are indicative of the quality and style of the product but may not represent the precise details of the product you receive. This is because we are constantly working to make improvements. For aesthetic reasons, cables and/or electrical elements are often not shown. Refer to technical data sheets for all technical data. Images and colours are not part of any contract or warranty in any way.