Jut lounge chair

by Studio Vondom

The Jut Collection, skillfully designed by Studio Vondom, offers a captivating selection of outdoor garden furniture that beautifully blends style and practicality. This remarkable collection includes a luxurious lounger, a sleek sofa, a cozy armchair and a refined chair. It also offers two tables of varying sizes, an extendable table, versatile stools and a high table, all perfect for enhancing any outdoor setting.
Each piece is meticulously crafted in Europe with an emphasis on quality and innovative design. With the Jut Collection, you can transform your patio or garden into a stylish retreat, showcasing contemporary outdoor furniture that not only enhances your space, but also provides exceptional comfort and sophistication. Whether you are entertaining or enjoying quiet moments, this collection is the perfect choice for any outdoor environment.

VONDOM

Info

Description

Made of polyethylene resin by rotational moulding.100% Recyclable. Item suitable for indoor and outdoor use. Available in different finishes.

Weight: 20 Kg

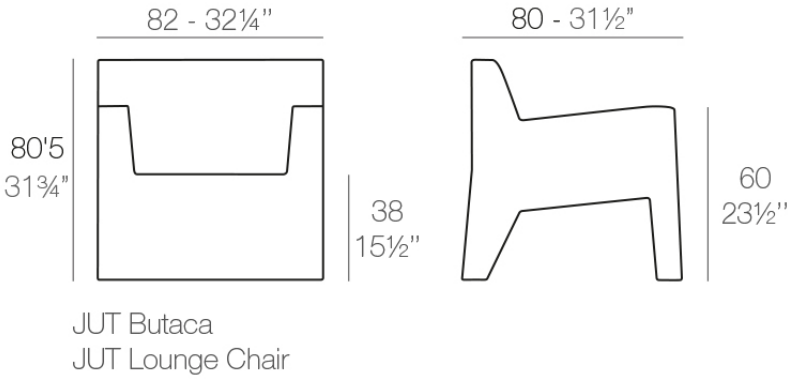

VONDOM

Finishes

finishes

Basic
Ref. 44401

Matt Polyethylene

Lacquered
Ref. 44401F

VONDOM

white 3101

black 3102

ecru 3103

tortora 3104

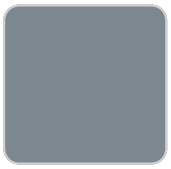
gray 3105

anthracite 3106

garnet 3113

green 3116

cream 3117

blue 3118

brown 3125

Lacquered Polyethylene

fabric

BAIONA
Ref. 44501CO

jade 10109 baiona

white 10100 baiona

brown 10108 baiona

garnet 10107 baiona

clay 10106 baiona

black 10114 baiona

camel 10104 baiona

gray 10113 baiona

cream 10103 baiona

blue 10112 baiona

ocean 10111 baiona

tortora 10102 baiona

green 10110 baiona

ecru 10101 baiona

Group 1C. High density 100% acrylic fabric, which provides a solid feel. It has an irregular pattern that adds a handcrafted touch.

CALELLA
Ref. 44501CO

tortora 10122 calella

ecru 10121 calella

anthracite 10129 calella

white 10120 calella

gray 10128 calella

blue 10127 calella

jade 10126 calella

clay 10125 calella

mustard 10124 calella

cream 10123 calella

Group 1C. PFAS-free 100% acrylic fabric with a rich and unusual texture and an exceptional sofness, which enhances the comfort of the furniture.

FISTERRA
Ref. 44501CO

cream 10132 fisterra

white 10130 fisterra

ecru 10131 fisterra

tortora 10135 fisterra

camel 10134 fisterra

peach 10146 fisterra

clay 10137 fisterra

brown 10136 fisterra

olive 10145 fisterra

jade 10139 fisterra

green 10140 fisterra

ocean 10141 fisterra

blue 10142 fisterra

gray 10143 fisterra

anthracite 10144 fisterra

black 10147 fisterra

Group 1C. 100% acrylic fabric, with a distintive irregular marbled pattern and a soft feel.

PORTONOVO
Ref. 44501CO

brown 10158 portonovo

white 10150 portonovo

black 10165 portonovo

garnet 10157 portonovo

anthracite 10164 portonovo

clay 10156 portonovo

gray 10163 portonovo

mustard 10155 portonovo

blue 10162 portonovo

camel 10154 portonovo

ocean 10161 portonovo

cream 10153 portonovo

green 10160 portonovo

tortora 10152 portonovo

jade 10159 portonovo

ecru 10151 portonovo

Group 1A. 100% acrylic fabric, with a flat and simple design, which adapts to any decorative style.

ALTEA
Ref. 44501CO

tortora 1102 altea

white 1100 altea

camel 1120 altea

clay 1122 altea

garnet 1106 altea

brown 1104 altea

jade 1125 altea

ocean 1123 altea

gray 1101 altea

anthracite 1124 altea

black 1105 altea

Group 1A. Soft outdoor fabric with leather-like texture.

AROUSA
Ref. 44501CO

tortora 1209 arousa

camel 1230 arousa

clay 1231 arousa

brown 1214 arousa

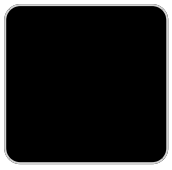
jade 1235 arousa

gray 1208 arousa

anthracite 1210 arousa

Group 1B. Soft outdoor fabric with shiny finish.

Ambients