Quartz folding chair

by Ramón Esteve

The Quartz collection of modern chairs and tables, designed by Ramón Esteve for Vondom, has a distinctive appearance characterized by **vertical lines** and triangular profiles. One of its outstanding features is the line of one of its vertices, which creates an impression of lightness, making the furniture seem almost weightless, while still ensuring robust functionality.
Crafted with high quality materials, this modern collection of chairs and tables is perfect for enhancing both indoor and outdoor spaces. With its elegant design and durability, the Quartz collection blends seamlessly into any environment, striking the perfect balance between form and function.

VONDOM

Info

Description

Injected polypropylene with fiber glass. Stackable. Item suitable for indoor and outdoor use.

Weight: 4.81 Kg

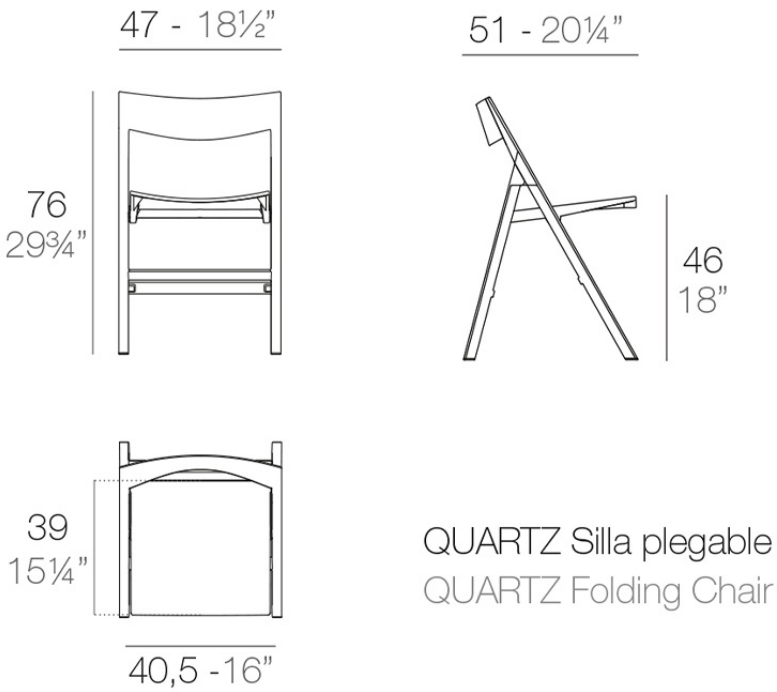

Finishes

finishes

Basic
Ref. 54197

white

black

ecru

Available in various colors

VONDOM

Ambients