ARKETIPO / INDOOR

BED MILKY WAY DREAM

designed by Mauro Lipparini 2025

STRUCTURE: wood.

FRAME UPHOLSTERY: multi-density expanded polyurethane (T40 + T30) covered with resin lining 100gr coupled with cotton and synthetic lining 3mm.

HEADBOARD UPHOLSTERY: expanded polyurethane T30N covered with resin lining 150gr.

HEIGHTS: 17 cm (slatted base); 30 cm (bed frame)

FEET: Bed: plastic h.3cm (headboard), h. 16cm (slatted base). Bench: micaceous brown varnished metal or black nickel h.5 cm

NOTA: 1 The covers of the quilted headboard and of the bench are not removable.

NOTA: 2 The headboard can also be assembled not in the middle of the bed frame, but on the right or on the left by intervals of 25 cm.

Bed - mattress 180x200 cm

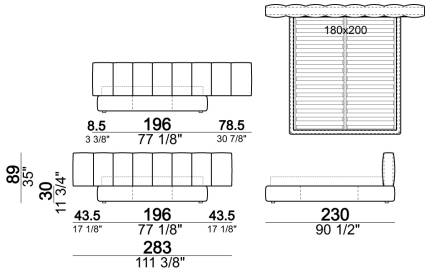

Bed - mattress 193x203 cm

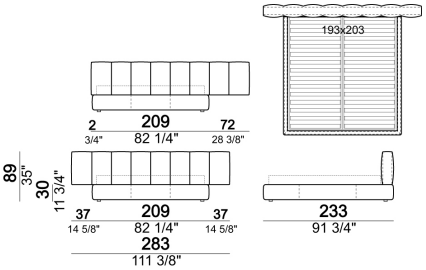

Bed - mattress 193x203 cm

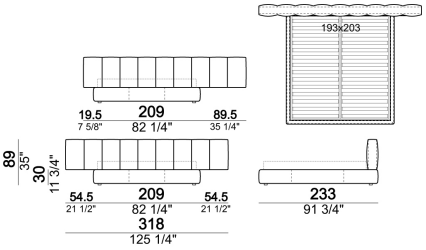

Bed - mattress 180x200 cm

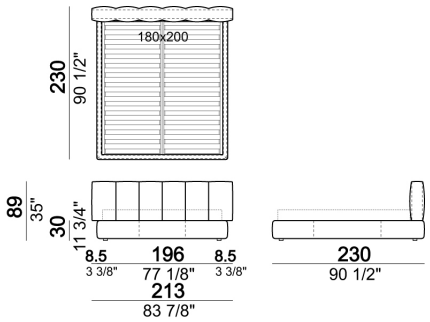

Pouf

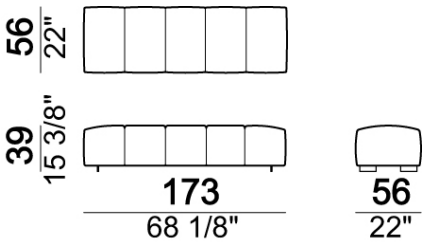

Bed - mattress 160x200 cm

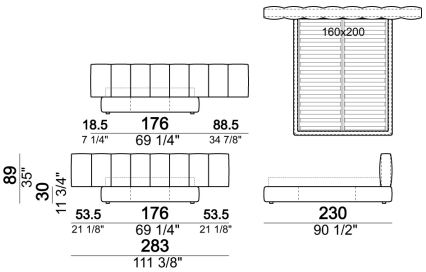

Bed - mattress 180x200 cm

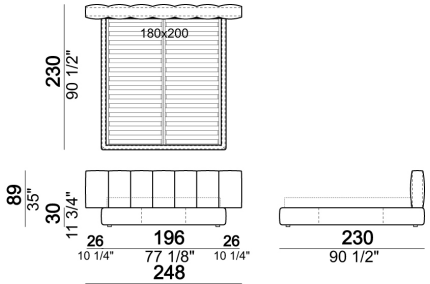

Bed - mattress 160x200 cm

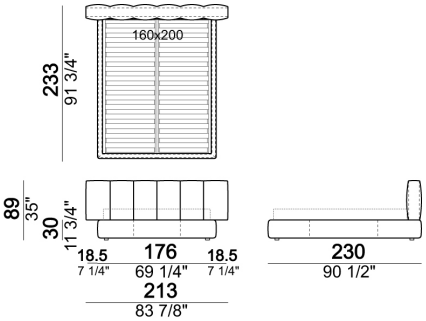

Bed - mattress 180x200 cm

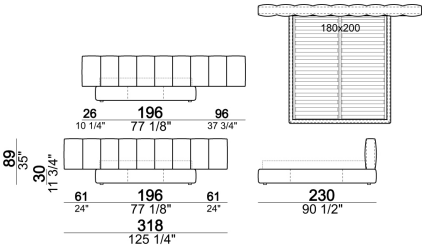

Bed - mattress 193x203 cm

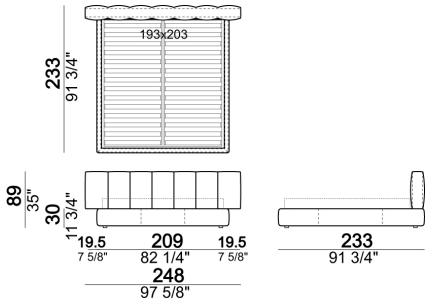

Bed - mattress 193x203 cm

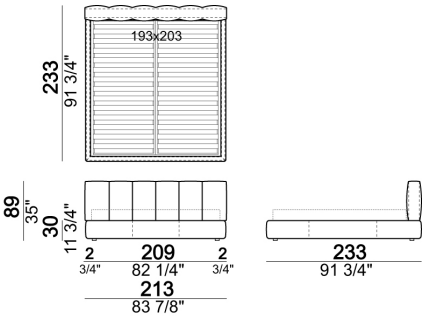
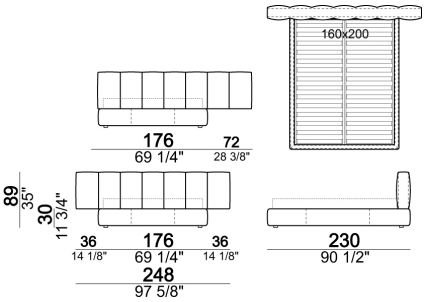
Bed - mattress 160x200 cm