Vase ø120×91

Studio Vondom's extensive collection of indoor and outdoor planters offers timeless and minimalist designs that can help create unique and original atmospheres in homes, restaurants, and any other space.

Info

Description

Pot made of polyethylene resin by rotational moulding. 100% Recyclable. Item suitable for indoor and outdoor use. Available in different finishes.

Weight: 22 Kg

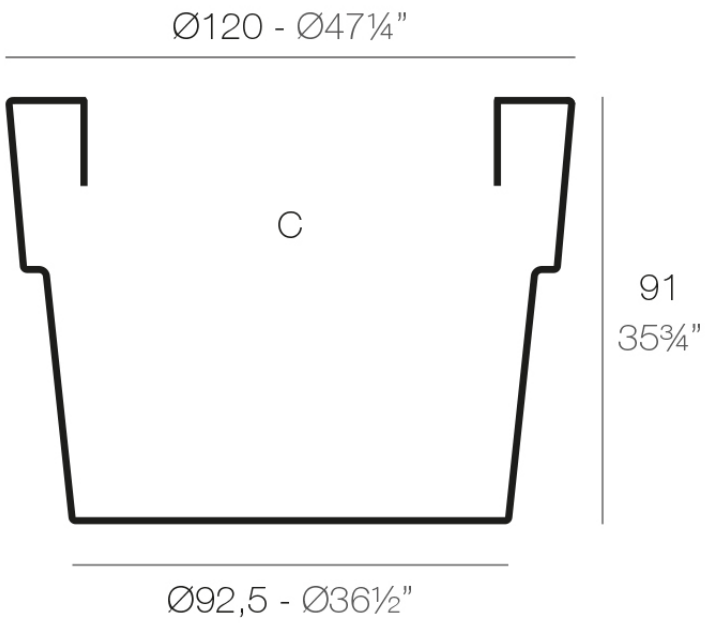

VASO Ø120 cm	C = 800 L
VASO Ø47¼”	C = 211¼ gal

Finishes

finishes

Simple
Ref. 40212

white 2001

black 2002

ecru 2003

tortora 2004

gray 2005

anthracite 2006

brown 2008

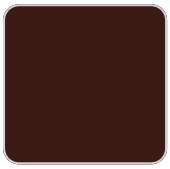
garnet 2015

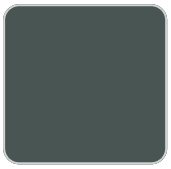
green 2016

cream 2017

blue 2018

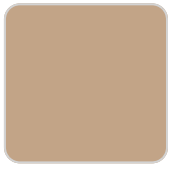
camel 2020

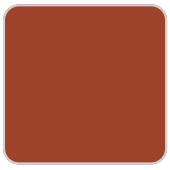
clay 2022

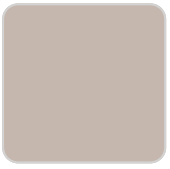
ecru granite

cream granite

ice 2101

Matt finishes pot one wall

Simple Lacquered
Ref. 40212F

VONDOM

white 3101

black 3102

ecru 3103

tortora 3104

gray 3105

anthracite 3106

garnet 3113

green 3116

cream 3117

blue 3118

brown 3125

plato

Ref. 42712

white 2001

black 2002

ecru 2003

tortora 2004

gray 2005

anthracite 2006

brown 2008

garnet 2015

green 2016

cream 2017

blue 2018

camel 2020

clay 2022

ecru granite

cream granite

ice 2101

Ambients