Agatha table

by Agatha Ruiz de la Prada

Vondom introduces the Agatha Collection, created by Agatha Ruiz de la Prada, as their first Kids furniture collection, infused with a playful, youthful, and spontaneous feel. The designer's signature symbols are immediately recognizable in the kids furniture, characterized by their simple, charming, and elegant forms.

VONDOM

Info

Description

Made of polyethylene resin by rotational moulding. 100% Recyclable. Item suitable for indoor and outdoor use. Available in different finishes.

Weight: 14 Kg

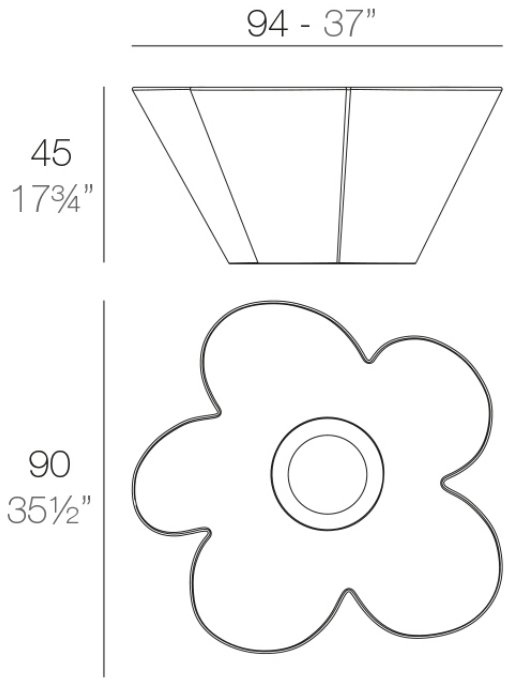

AGATHA Mesa Baja (incluye portalápices)
AGATHA Low Table (pencil case included)

VONDOM

Finishes

finishes

Basic
Ref. 52002

white 2001 | black 2002 | ecru 2003 | tortora 2004 | gray 2005

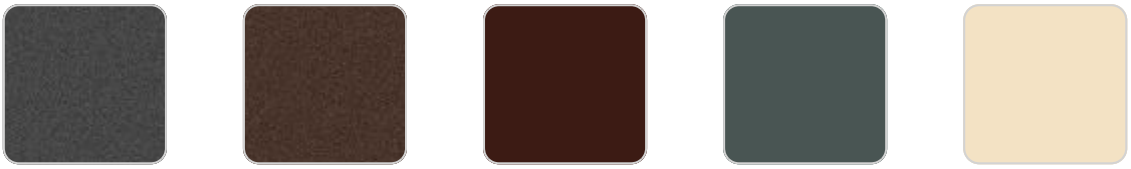

anthracite 2006 | brown 2008 | garnet 2015 | green 2016 | cream 2017

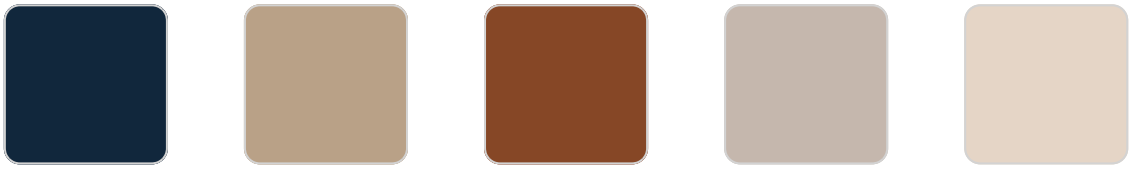

blue 2018 | camel 2020 | clay 2022 | ecru granite | cream granite

ice 2101

Matt Polyethylene

Lacquered
Ref. 52002F

VONDOM

white 3101

black 3102

ecru 3103

tortora 3104

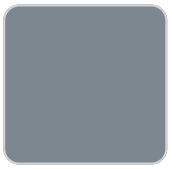
gray 3105

anthracite 3106

garnet 3113

green 3116

cream 3117

blue 3118

brown 3125

Lacquered Polyethylene

TWO TONE – Lacquered
Ref. 52002FP

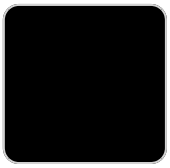
white/red

Two-tone lacquered Polyethylene

VONDOM

Ambients