moooi

Aldora Vis a Vis

CRISTINA CELESTINO

The Aldora Vis a Vis, designed by Cristina Celestino, adds a touch of natural charm to any commercial or private space. The sculptural backrests are inspired by Milanese decadence and graceful calla lilies. Its dual-sided design offers functional elegance, making it perfect as a freestanding seater. Discover versatility with left/right setups and choose from an array of fabrics and leathers for a personalised touch. Aldora Vis a Vis will invite conversations, engage in style, and elevate any space. The Aldora Vis a Vis is also available as a sofa and chaise longue. Configure the Aldora Vis a Vis to your personal tastes with the online configurator. Choose from a wide selection of fabrics and leathers and discover what it looks like with our AR tool.

Detailing

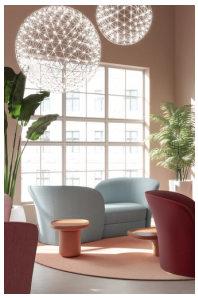

Aldora Vis a Vis is perfect for offices and waiting areas. This dual-sided, freestanding design offers functional elegance.

Aldora Vis a Vis / Left

Dimensions

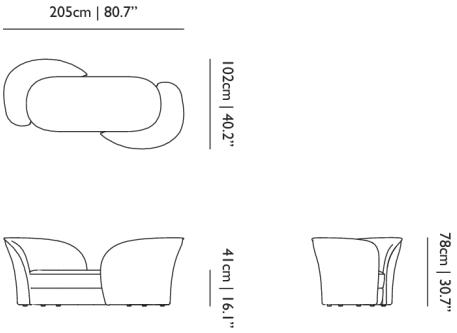

Product

WIDTH 205cm | 80.7"
HEIGHT 78cm | 30.7"
DEPTH 102cm | 40.2"
WEIGHT NETTO 46kg | 101.41lbs

Packaging

WIDTH 85cm | 33.5"
HEIGHT 84cm | 33.1"
CUBAGE 1.48m^3 | 52.19ft^3
LENGTH 207cm | 81.5"
WEIGHT 59.5kg | 131.17lbs

Technical

MATERIAL
Wood and steel frame, foam over steel springs

WEIGHT CAPACITY
110kg | 242.51lbs

SEATING CAPACITY
2

Aldora Vis a Vis / Right

Dimensions

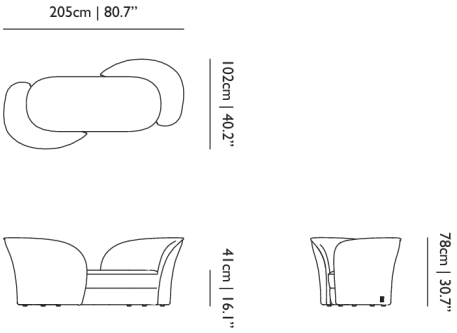

Product

WIDTH 205cm | 80.7"
HEIGHT 78cm | 30.7"
DEPTH 102cm | 40.2"
WEIGHT NETTO 46kg | 101.41lbs

Packaging

WIDTH 85cm | 33.5"
HEIGHT 84cm | 33.1"
CUBAGE 1.48m^3 | 52.19ft^3
LENGTH 207cm | 81.5"
WEIGHT 59.5kg | 131.17lbs

Technical

MATERIAL
Wood and steel frame, foam over steel springs

WEIGHT CAPACITY
110kg | 242.51lbs

SEATING CAPACITY
2

Upholstery

Abbracci *(available in 6 colours)*

COMPOSITION
100% PES

ABRASION
50000 martindale
lightfastness 3 - 4
pilling 5

FIRE RESISTANCE
BS 5852 - Ignition source 0 (Cigarette)
BS 5852 - Ignition source 1 (Match flame equivalent)
EN 1021-1 (Cigarette)
EN 1021-2 (Match)
TB 117-2013

Arda *(available in 12 colours)*

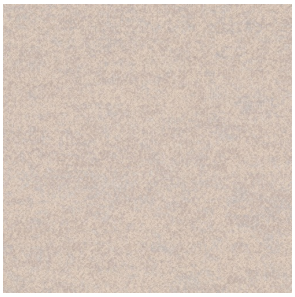

ABRASION
50000 martindale
lightfastness 5 - 6
pilling 4 - 5

FIRE RESISTANCE
BS 5852 - Ignition source 0 (Cigarette)
BS 5852 - Ignition source 5 (Crib 5)
BS 5852 - Ignition source 1 (Match flame equivalent)
EN 1021-1 (Cigarette)
EN 1021-2 (Match)
TB 117-2013
EU Ecolabel

Autumn *(available in 14 colours)*

Boucle *(available in 5 colours)*

COMPOSITION
43% CO, 14% PA, 12% CV, 3% PES, 28% PAN

ABRASION
40000 martindale
lightfastness 4 - 6
pilling 4 - 5

FIRE RESISTANCE
EN 1021-1 (Cigarette)
EN 1021-2 (Match)

Divina 3 *(available in 56 colours)*

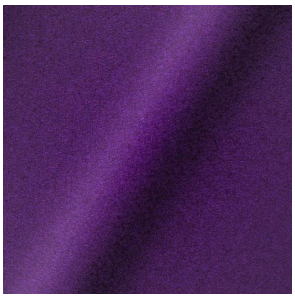

COMPOSITION
100% WO

ABRASION
45000 martindale
lightfastness 7
pilling 3

FIRE RESISTANCE
BS 5852 - Ignition source 0 (Cigarette)
BS 5852 - Ignition source 5 (Crib 5)
BS 5852 - Ignition source 1 (Match flame equivalent)
EN 1021-1 (Cigarette)
EN 1021-2 (Match)
TB 117-2013
EU Ecolabel

Divina MD *(available in 27 colours)*

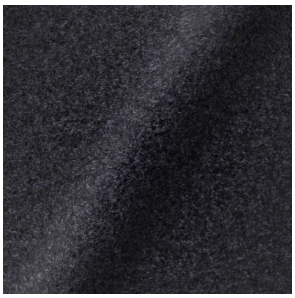

COMPOSITION
100% WO

ABRASION
45000 martindale
lightfastness 6
pilling 3

FIRE RESISTANCE
BS 5852 - Ignition source 0 (Cigarette)
BS 5852 - Ignition source 5 (Crib 5)
BS 5852 - Ignition source 1 (Match flame equivalent)
EN 1021-1 (Cigarette)
EN 1021-2 (Match)
EU Ecolabel

Divina Melange 3 *(available in 49 colours)*

COMPOSITION
100% WO

ABRASION
45000 martindale
lightfastness 6 - 7
pilling 3

FIRE RESISTANCE
BS 5852 - Ignition source 0 (Cigarette)
BS 5852 - Ignition source 5 (Crib 5)
BS 5852 - Ignition source 1 (Match flame equivalent)
EN 1021-1 (Cigarette)
EN 1021-2 (Match)
TB 117-2013
EU Ecolabel

Bearded Leopard *(available in 3 colours)*

COMPOSITION

77% CV, 15% PES, 7% CO, 1% PA

ABRASION

15000 martindale
lightfastness 4 - 6
pilling 4

Blushing Sloth *(available in 1 colours)*

Calligraphy Bird *(available in 4 colours)*

COMPOSITION

64% CV, 21% PES, 15% CO

ABRASION

50000 martindale
lightfastness 4 - 6
pilling 5

Dandelion Cranes *(available in 1 colours)*

Dodo Pavone *(available in 3 colours)*

COMPOSITION
12% CO, 88% PES

ABRASION
40000 martindale
lightfastness 5
pilling 4 - 5

Golden Tiger *(available in 1 colours)*

Memento Moooi Medley *(available in 1 colours)*

COMPOSITION
100% PES

ABRASION
50000 martindale
lightfastness 4 - 6
pilling 5

FIRE RESISTANCE
EN 1021-1 (Cigarette)
EN 1021-2 (Match)
TB 117-2013

Menagerie of Extinct Animals *(available in 2 colours)*

COMPOSITION
100% PES

ABRASION
50000 martindale
lightfastness 4 - 6
pilling 5

FIRE RESISTANCE
EN 1021-1 (Cigarette)
EN 1021-2 (Match)
TB 117-2013

EA, Queen Cobra *(available in 1 colours)*

Blushing Sloth Melange Mohair *(available in 1 colours)*

COMPOSITION
85% WV, 15% WM

ABRASION
15000 martindale
lightfastness 4 - 6
pilling 2 - 3

Blushing Sloth Woolly Mohair *(available in 1 colours)*

COMPOSITION
24% PES, 15% PA, 8% CO, 24% WM, 29% WV

ABRASION
40000 martindale
lightfastness 4 - 6
pilling 3 - 4

Fiord 2 *(available in 39 colours)*

COMPOSITION
92% WV, 8% PA

ABRASION
60000 martindale
lightfastness 6
pilling 4 - 5

FIRE RESISTANCE
EN 1021-1 (Cigarette)
EN 1021-2 (Match)
BS 5852 - Ignition source 0 (Cigarette)
BS 5852 - Ignition source 1 (Match flame equivalent)

Guest *(available in 13 colours)*

Hallingdal 65 *(available in 58 colours)*

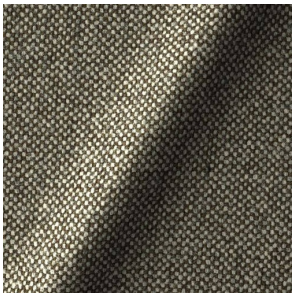

COMPOSITION
30% CV, 70% WV

ABRASION
100000 martindale
lightfastness 7
pilling 3 - 4

FIRE RESISTANCE
BS 5852 - Ignition source 0 (Cigarette)
BS 5852 - Ignition source 5 (Crib 5)
BS 5852 - Ignition source 1 (Match flame equivalent)
EN 1021-1 (Cigarette)
EN 1021-2 (Match)
TB 117-2013
EU Ecolabel

Justo *(available in 11 colours)*

COMPOSITION
15% CO, 35% PC, 10% PA, 40% CV

ABRASION
50000 martindale
lightfastness 5
pilling 4

FIRE RESISTANCE
EN 1021-1 (Cigarette)
EN 1021-2 (Match)
TB 117-2013

Liscio *(available in 6 colours)*

COMPOSITION
35% WO, 35% CV, 21% CO, 9% PA

ABRASION
30000 martindale
lightfastness 4 - 6
pilling 4

FIRE RESISTANCE
TB 117-2013

Mosaic 2 *(available in 15 colours)*

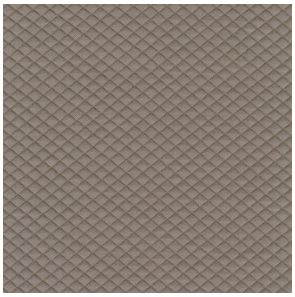

COMPOSITION
58% PES, 27% WV, 9% PA, 6% EA

ABRASION
100000 martindale
lightfastness 6 - 7
pilling 4 - 5

Palette *(available in 12 colours)*

COMPOSITION
42% CO, 29% WO, 29% TL

ABRASION
45000 martindale
lightfastness 4 - 5
pilling 3 - 3

FIRE RESISTANCE
BS 5852 - Ignition source 0 (Cigarette)
TB 117-2013
BS 5852 - Ignition source 5 (Crib 5)

Reflect *(available in 35 colours)*

Remix 3 *(available in 54 colours)*

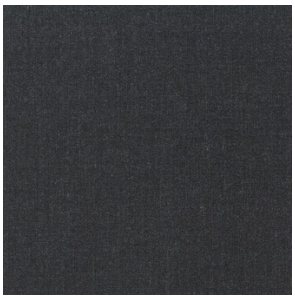

COMPOSITION
10% PA, 90% WV

ABRASION
100000 martindale
lightfastness 5
pilling 4

Savanne *(available in 3 colours)*

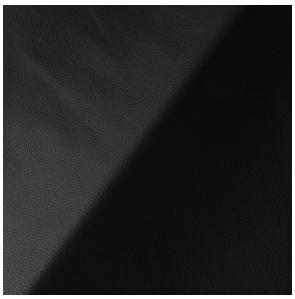

FIRE RESISTANCE
EN 1021-1 (Cigarette)
EN 1021-2 (Match)
TB 117-2013
OEKO-TEX

Shade *(available in 5 colours)*

ABRASION
lightfastness 3 - 4

FIRE RESISTANCE
EN 1021-1 (Cigarette)
EN 1021-2 (Match)
TB 117-2013

Solis *(available in 9 colours)*

COMPOSITION
60% WO, 30% PES, 2% PA, 3% PC

ABRASION
40000 martindale
lightfastness 5
pilling 3 - 4

FIRE RESISTANCE
EN 1021-1 (Cigarette)
EN 1021-2 (Match)
TB 117-2013

Spectrum *(available in 11 colours)*

ABRASION
lightfastness 6 - 6

FIRE RESISTANCE
EN 1021-1 (Cigarette)
EN 1021-2 (Match)
TB 117-2013
OEKO-TEX

Sprinkles *(available in 23 colours)*

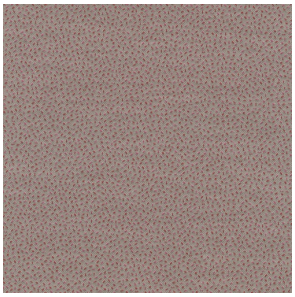

ABRASION

80000 martindale
lightfastness 7
pilling 4

FIRE RESISTANCE

EU Ecolabel
BS 5852 - Ignition source 0 (Cigarette)
BS 5852 - Ignition source 5 (Crib 5)
BS 5852 - Ignition source 1 (Match flame equivalent)
EN 1021-1 (Cigarette)
EN 1021-2 (Match)
TB 117-2013

Steelcut Trio 3 *(available in 54 colours)*

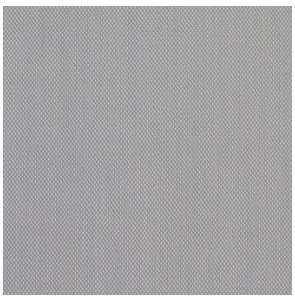

COMPOSITION

90% WV, 10% PA

ABRASION

100000 martindale
lightfastness 5
pilling 4

FIRE RESISTANCE

BS 5852 - Ignition source 0 (Cigarette)
BS 5852 - Ignition source 1 (Match flame equivalent)
EN 1021-1 (Cigarette)
EN 1021-2 (Match)
EU Ecolabel

Ultra *(available in 6 colours)*

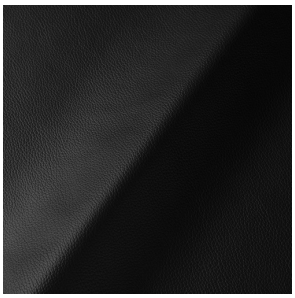

ABRASION

lightfastness 6 - 7

FIRE RESISTANCE

EN 1021-1 (Cigarette)
EN 1021-2 (Match)
TB 117-2013
ANSI/BIFMA M7.1 (Total Volatile Organic Compounds)

Vesper *(available in 9 colours)*

COMPOSITION

10% CO, 40% LI, 10% PA, 10% PES, 30% CV

ABRASION

40000 martindale
lightfastness 5
pilling 4

FIRE RESISTANCE

EN 1021-1 (Cigarette)
EN 1021-2 (Match)
TB 117-2013