Vela coffee table 40x40x30

by Ramón Esteve

Vela collection, designed by Ramón Esteve for Vondom, captures the essence of modern design in outdoor living. This collection of contemporary outdoor furniture and planters is crafted to provide exceptional comfort and quality, similar to indoor furnishings, while retaining its distinctive features. With a focus on sleek design, each piece enhances contemporary outdoor furniture and showcases the feeling of modern luxury.
Manufactured in Europe, the Vela collection is an example of superior craftsmanship and innovation. Crafted from the highest quality materials, these pieces are durable and weather resistant, ensuring lasting beauty and functionality. Whether entertaining or enjoying quiet moments, the collection transforms your outdoor space into a sophisticated retreat that perfectly blends modern design with comfort and style.

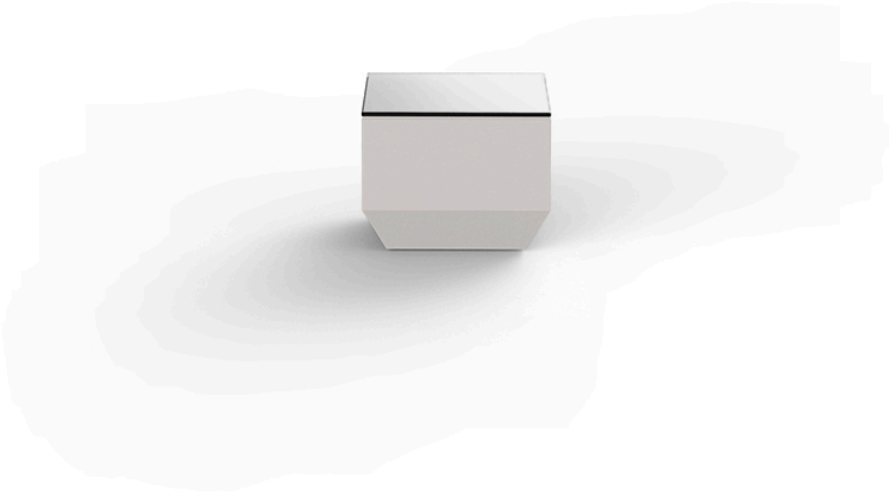

VONDOM

Info

Description

Made of polyethylene resin by rotational moulding.100% Recyclable. Item suitable for indoor and outdoor use. Available in different finishes.

Weight: 3.5 Kg

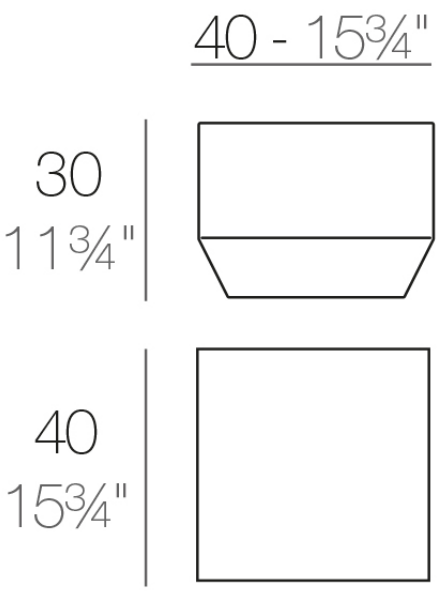

VELA Mesa Baja 40 x 40
VELA Low Table 15¾"

Finishes

finishes

Basic
Ref. 54041

Matt Polyethylene

Aluminium
Ref. 54041K

VONDOM

white | gray | anthracite | black | cream

camel | ecru | tortora | clay | garnet

brown | smoked | green | ocean | blue

Lacquered aluminium profile.

Lacquered
Ref. 54041F

white 3101 | black 3102 | ecru 3103 | tortora 3104 | gray 3105

anthracite 3106 | garnet 3113 | green 3116 | cream 3117 | blue 3118

brown 3125

Lacquered Polyethylene

lighting

Led – White
Ref. 54041W

ice 2101

White internally lit unit with LED technology. Available only in matte ice white finish.

LED RGBW – Cable
Ref. 54041L

ice 2101

Unit with internal lighting with RGBW LED technology and remote control unit for switching colors. Available only in matte ice white finish. Remote control included.

LED RGBW DMX – Cable
Ref. 54041D

ice 2101

Unit with internal lighting with RGBW LED technology and remote control unit for switching colors. Also controlLED by DMX-1024 (wireless), enabling communication between one or more products simultaneously via the DMX

transmitter (not included). There are two options to choose from: Professional XLR DMX and Home WIFI DMX. (Remote control included).
Optional battery

LED RGBW – Battery
Ref. 54041Y

ice 2101

Unit with internal lighting with battery-powered RGBW LED technology. Includes charger and remote control for switching colors and charger. Available only in matte ice white finish.

LED RGBW DMX – Battery
Ref. 54041DY

ice 2101

Unit with internal lighting with RGBW LED technology and remote control unit for switching colors. Also controlLED by DMX-1024 (wireless), enabling communication between one or more products simultaneously via the DMX transmitter (not included). There are two options to choose from: Professional XLR DMX and Home WIFI DMX. (Remote control included).

tabletops

HPL Black Edge Top
Ref. 54041P

VONDOM

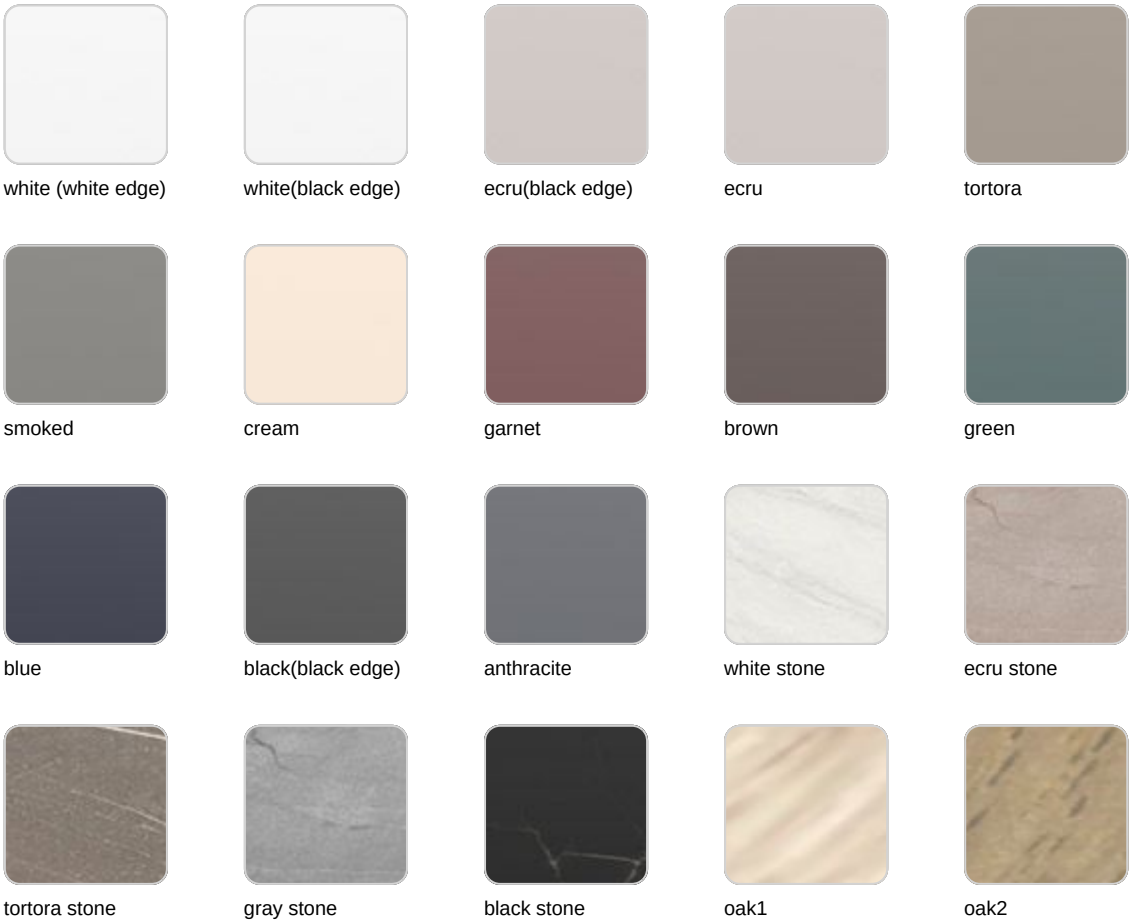

HPL black edge

TEMPERED GLASS
Ref. 54041C

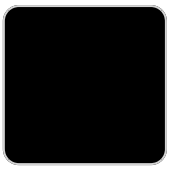

gray 2005

Security temperate Glass, board thickness 10 mm

VONDOM
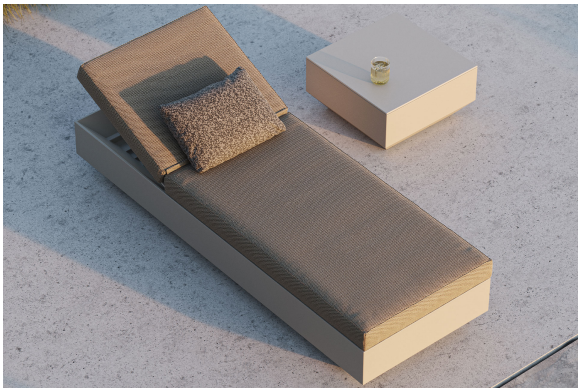
Ambients