Faz side bar

by Ramón Esteve

A commitment to minimalist aesthetics, Faz is a sleek and contemporary ensemble of outdoor furniture and planters designed by Ramón Esteve for Vondom. Esteve's creative vision for Faz transcends mere functionality and aims to integrate and harmonize with different spaces, be they residential or expansive installations. Through a deliberate selection of materials and the strategic incorporation of lighting elements, Ramón Esteve has created an atmosphere that exudes serenity, timelessness and an universality. His ability to blend form and function creates an immersive experience where the boundaries between indoors and outdoors are blurred, leaving behind only an impression of cohesive elegance. In short, he is the mastermind behind Faz's ambience.

Info

Description

Made of polyethylene resin by rotational moulding. 100% Recyclable. Item suitable for indoor and outdoor use. Available in different finishes.

Weight: 45.05 Kg

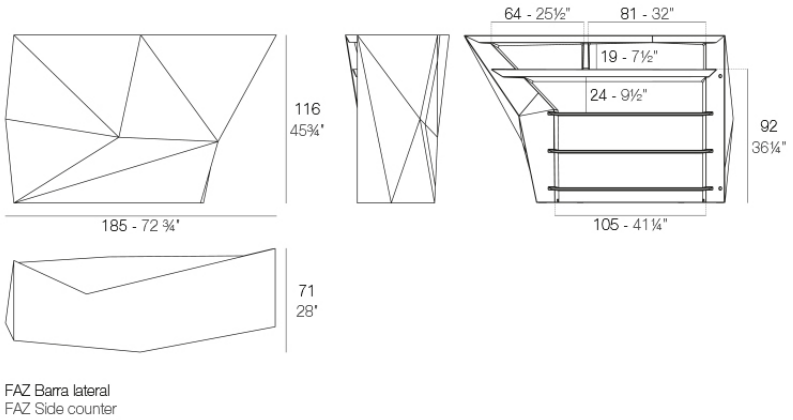

Combinations

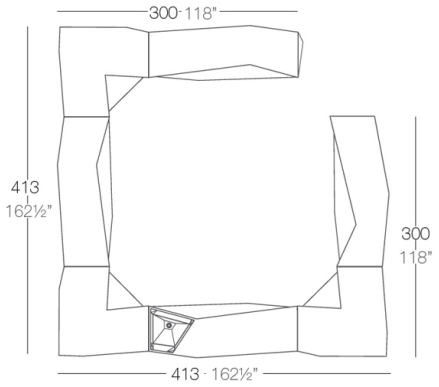

2 X 54113
1 X 54114
3 X 54112
1 X 54111

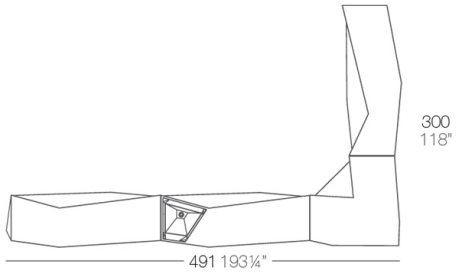

1 X 54113
1 X 54114
1 X 54112
1 X 54111

Accessories

- **BLUETOOTH**

  Link your smartphone or tablet to the sound system via Bluetooth.

- **TOP**

  HPL Solid Core Top

- **SHELVES**

Finishes

finishes

Basic
Ref. 54111

Matt Polyethylene

Lacquered
Ref. 54111F

Lacquered Polyethylene

lighting

Led – White
Ref. 54111W

White internally lit unit with LED technology. Available only in matte ice white finish.

LED RGBW – Cable
Ref. 54111L

ice 2101

Unit with internal lighting with RGBW LED technology and remote control unit for switching colors. Available only in matte ice white finish. Remote control included.

LED RGBW DMX – Cable
Ref. 54111D

ice 2101

Unit with internal lighting with RGBW LED technology and remote control unit for switching colors. Also controlLED by DMX-1024 (wireless), enabling communication between one or more products simultaneously via the DMX transmitter (not included). There are two options to choose from: Professional XLR DMX and Home WIFI DMX. (Remote control included).
Optional battery

LED RGBW – Battery
Ref. 54111Y

ice 2101

Unit with internal lighting with battery-powered RGBW LED technology. Includes charger and remote control for switching colors and charger. Available only in matte ice white finish.
LED RGBW DMX – Battery

Ref. 54111DY

ice 2101

Unit with internal lighting with RGBW LED technology and remote control unit for switching colors. Also controlLED by DMX-1024 (wireless), enabling communication between one or more products simultaneously via the DMX transmitter (not included). There are two options to choose from: Professional XLR DMX and Home WIFI DMX. (Remote control included).

tabletops

HPL Black Edge Top
Ref. 54111E

white (white edge)
white(black edge)
ecru(black edge)
ecru
tortora
smoked
cream
garnet
brown
green
blue
black(black edge)
anthracite
white stone
ecru stone
tortora stone
gray stone
black stone
oak1
oak2

VONDOM

HPL black edge

HPL Solid Core Top
Ref. 54111Z

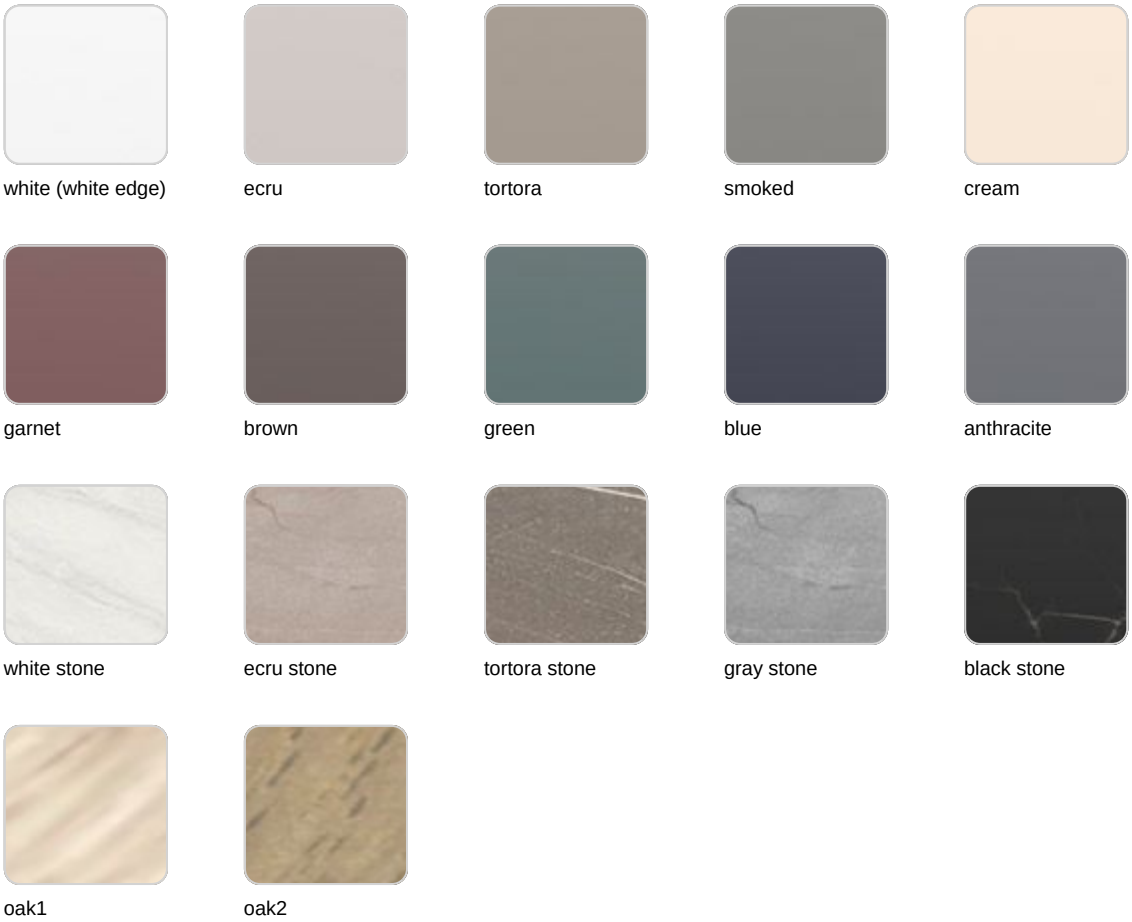

HPL solid core

ruedas

WHEELS
Ref. 56001B

gray 2005

VONDOM

Ambients