SEELA | S328

Antti Kotilainen | 2018

SEELA

Antti Kotilainen | 2018

When they communicate, it is the best of all possible worlds. Man and nature together, one observes, the other suggests shapes and materials. This extraordinary encounter has led to a lesson in Finnish design. The encounter between Antti Kotilainen and Lapalma has resulted in SEELA, a chair that expresses beauty, with spontaneous contact between wood, polypropylene and steel. The sinuous shell on light bases has an integrated seamless seat-pad. Countless variations. Much serenity.
Product selected for the Quick Ship program, download the PDF

SEELA

Antti Kotilainen | 2018

| S328 stool with footrest, height-adjustable and backrest

Shell in polypropylene with integrated seamless seatpad in polypropylene, wood or fabric, easily removable with 4 screws and replaceable. A fully upholstered shell without removable seat-pad is also available. Height adjustable swivel frame with footrest in powder coated steel. 5 star base in aluminium powder coated and self-braking castors.

TEST Fire resistance - class 1 - PP
TEST 1 IM - Jet, Remix, Tonica, Valencia
EPD certification

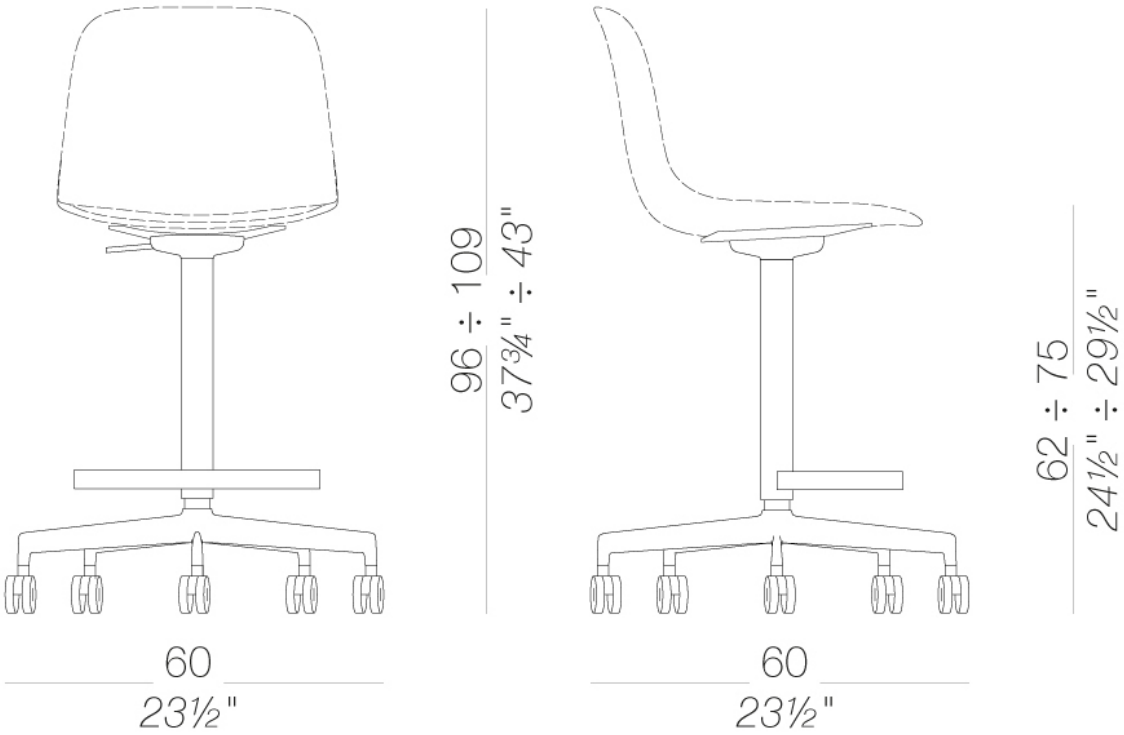

SEELA | S328

Antti Kotilainen | 2018

frame

powder coating
black
1 Colors

powder coating
white
1 Colors

shell

plastics
polypropylene
9 Colors

seat-pad

wood
black open pore
1 Colors

wood
blanched oak
1 Colors

plastics
polypropylene
9 Colors

upholstery

fabric
Canvas 2 - Grade C
45 Colors

fabric
Steelcut Trio 3 - Grade D
54 Colors

fabric
Remix 3 - Grade C
72 Colors

fabric
Tonica 2 - Grade C
39 Colors

fabric
Medley - Grade A
37 Colors

fabric
Maya - Grade A
43 Colors

fabric
Jet - Grade A
66 Colors

fabric
Capture - Grade B
60 Colors

fabric
Crisp - Grade B
40 Colors

fabric
Iris - Grade B
34 Colors

ecoleather
Valencia - Grade B
72 Colors

fabric
Grain - Grade. B
50 Colors

fabric
Re-wool - Grade C
25 Colors

fabric
Main Line Flax - Grade. B
57 Colors

fabric
Chili - Grade. A
47 Colors

fabric
Blazer - Grade. C
77 Colors

fabric
Umber - Grade. B
36 Colors

fabric
Nobel - Grade. C
30 Colors

fabric
Naveli - Grade. C
24 Colors

fabric
Fiocco - Grade. B
34 Colors

fabric
Atrium - Grade. C
16 Colors

fabric
Panama - Grade. A
48 Colors

fabric
Sorrento - Grade. B
22 Colors

SEELA | S328

Antti Kotilainen | 2018

consult the porfolio for the range of colors, fabrics, eco-leather, soft-leather.

use and maintenance instructions
Clean all parts in wood, leather, fabric and metal with a damp cloth or a diluted neutral cleaner. Do not use cleaners with alcohol, bleach, solvent or abrasive products. Any liquid spilt on the product must be wiped up immediately.When lifting or moving the product, hold it on the structure and not under the seat. The product should not be subjected to unbalanced weights, as it is designed for a proper rest on the foothold (on four legs or on the base). Our company relieves from any responsibility in case of damage caused to fragile floors. Avoid any improper use of the product: do not step on the product, on the footrest or on the armrests. Avoid any movements that could compromise the proper functionality of the product or the safety of the users.Wood and leather, being natural materials, could be easily damaged. Small impurities or imperfections are within quality standard range.Do not expose the product to weather conditions or atmospheric agents, nor to heat sources over 40°C. Also products for outdoor use could be afflicted by atmospheric agents. The product could undergo possible exterior changes due to particular exposure to heat, humidity and saltiness. An appropriate and frequent maintenance and cleaning of the product enhances its durability. The product could change colour and shade, if exposed to direct sunlight. Maintenance has to be carried out by experienced staff. Dispose of the package only after assembling the product, in order to avoid the loss of ironmongery and components. Once the product has been dismantled, the product itself or its components must be given to the public garbage disposal system, according to the legislation in force.