TRAIL | Round

Giuseppe Bavuso | 2023

TRAIL

Giuseppe Bavuso | 2023

Sometimes it is better to leave the main road and choose the paths less travelled. Style for great travellers, like Giuseppe Bavuso, who has christened TRAIL the splendid new table in the Lapalma collection. The profile is a cross between the most effervescent 1950s, Nordic essentiality and the highest Italian craftsmanship. Setting the pace is the die-cast aluminium base where the three soft, zoomorphic-inspired legs secretly join together, declaring a single design. The round top in HPL Fenix 10mm available in different colors extends to 3.00 metres. Designed to furnish gardens, terraces, public areas and cafés. All materials are disassemblable and recyclable. And in this case sustainability is not a path but Lapalma's high road.

TRAIL

Giuseppe Bavuso | 2023

| Round Table with legs and joints in die-cast aluminium, tops in HPL fenix 10 mm coated in various finishes, with lacquered edge and bottom.

Table with die-cast aluminium legs and joints. Fixing plate for top in sheet steel and spar in extruded aluminium. All powder-coated. HPL fenix 10 mm tops in various finishes, with lacquered edge and bottom. Gres tops also available. Adjustable nylon feet.

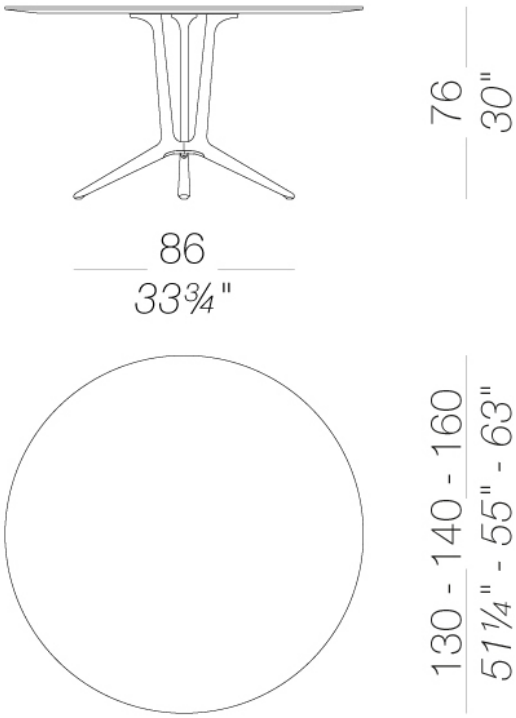

TRAIL | Round

Giuseppe Bavuso | 2023

top

gres
gres Ivory
1 Colors

gres
gres Moon
1 Colors

HPL 10 mm
black HPL fenix
1 Colors

HPL 10 mm
white HPL fenix
1 Colors

HPL 10 mm
HPL fenix rosso
Jaipur
1 Colors

HPL 10 mm
HPL fenix grigio
Londra
1 Colors

HPL 10 mm
HPL fenix comodoro
1 Colors

frame

powder coating
black
1 Colors

powder coating
white
1 Colors

TRAIL | Round

Giuseppe Bavuso | 2023

consult the porfolio for the range of colors, fabrics, eco-leather, soft-leather.

use and maintenance instructions
Clean all parts in wood, leather, fabric and metal with a damp cloth or a diluted neutral cleaner. Do not use cleaners with alcohol, bleach, solvent or abrasive products. Any liquid spilt on the product must be wiped up immediately.When lifting or moving the product, hold it on the structure and not under the seat. The product should not be subjected to unbalanced weights, as it is designed for a proper rest on the foothold (on four legs or on the base). Our company relieves from any responsibility in case of damage caused to fragile floors. Avoid any improper use of the product: do not step on the product, on the footrest or on the armrests. Avoid any movements that could compromise the proper functionality of the product or the safety of the users.Wood and leather, being natural materials, could be easily damaged. Small impurities or imperfections are within quality standard range.Do not expose the product to weather conditions or atmospheric agents, nor to heat sources over 40°C. Also products for outdoor use could be afflicted by atmospheric agents. The product could undergo possible exterior changes due to particular exposure to heat, humidity and saltiness. An appropriate and frequent maintenance and cleaning of the product enhances its durability. The product could change colour and shade, if exposed to direct sunlight. Maintenance has to be carried out by experienced staff. Dispose of the package only after assembling the product, in order to avoid the loss of ironmongery and components. Once the product has been dismantled, the product itself or its components must be given to the public garbage disposal system, according to the legislation in force.