Vela round canopy ø218×202 powder coated

by Ramón Esteve

Vela collection, designed by Ramón Esteve for Vondom, captures the essence of modern design in outdoor living. This collection of contemporary outdoor furniture and planters is crafted to provide exceptional comfort and quality, similar to indoor furnishings, while retaining its distinctive features. With a focus on sleek design, each piece enhances contemporary outdoor furniture and showcases the feeling of modern luxury.
Manufactured in Europe, the Vela collection is an example of superior craftsmanship and innovation. Crafted from the highest quality materials, these pieces are durable and weather resistant, ensuring lasting beauty and functionality. Whether entertaining or enjoying quiet moments, the collection transforms your outdoor space into a sophisticated retreat that perfectly blends modern design with comfort and style.

Info

Description

Canopy system made of thermo-lacquered aluminium profiles. Roller manufactures in plastic canvas (Sunvision).

Weight: 62.4 Kg

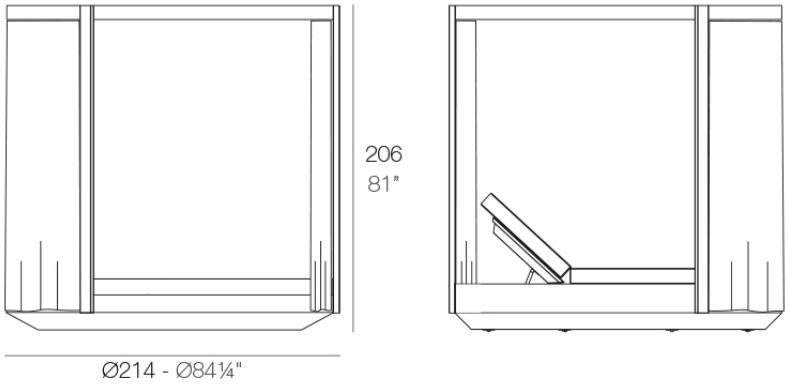

VELA Pérgola redonda (daybed no incluido)
VELA Round canopy (daybed not included)

Finishes

finishes

Basic
Ref. 54137F

white

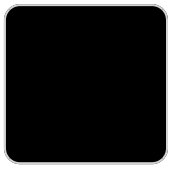
gray

anthracite

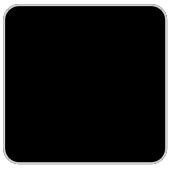
black

cream

ecru

tortora

garnet

brown

smoked

green

blue

silver

Lacquered aluminium profile.

curtain

VELUM
Ref. 54137AA

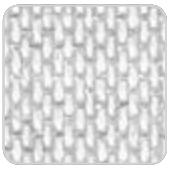

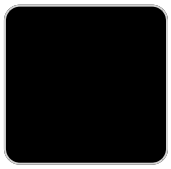

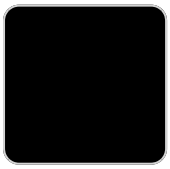

white tortora cream gray

Outdoor fabrics are waterproof 100 % acrylic. Used for curtains of Canopys and round Daybed.

parasol

SUNVISION
Ref. 54137A

white 1910

steel 1911

PVC and acrylic outdoor fabric for Vela Canopy, Vela Round Canopy and Ulm parasol.

VONDOM

Ambients