Faz pot 61x61x50

by Ramón Esteve

A commitment to minimalist aesthetics, Faz is a sleek and contemporary ensemble of outdoor furniture and planters designed by Ramón Esteve for Vondom. Esteve's creative vision for Faz transcends mere functionality and aims to integrate and harmonize with different spaces, be they residential or expansive installations. Through a deliberate selection of materials and the strategic incorporation of lighting elements, Ramón Esteve has created an atmosphere that exudes serenity, timelessness and an universality. His ability to blend form and function creates an immersive experience where the boundaries between indoors and outdoors are blurred, leaving behind only an impression of cohesive elegance. In short, he is the mastermind behind Faz's ambience.

VONDOM

Info

Description

Weight: 8 Kg

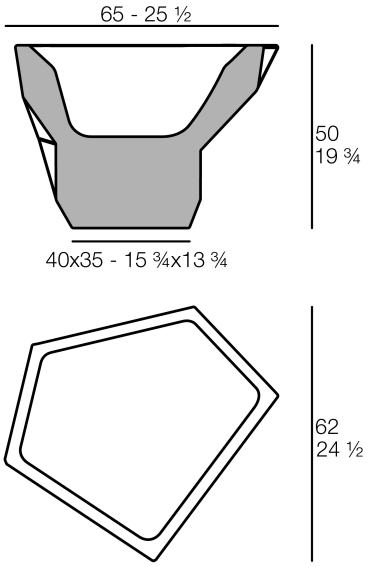

FAZ Jarron Pequeño	C = 28L
FAZ Smal Planter	C = 7 ½ gal

Finishes

finishes

Basic
Ref. 54400A

white 2001

black 2002

ecru 2003

tortora 2004

gray 2005

anthracite 2006

brown 2008

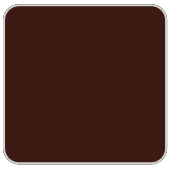
garnet 2015

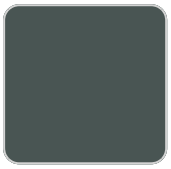
green 2016

cream 2017

blue 2018

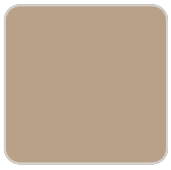
camel 2020

clay 2022

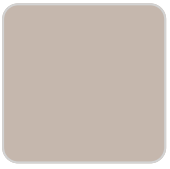
ecru granite

cream granite

ice 2101

Matt Polyethylene

Lacquered
Ref. 54400RF

VONDOM

Lacquered Polyethylene

lighting

Led – White
Ref. 54400W

White internally lit unit with LED technology. Available only in matte ice white finish.

LED RGBW – Cable
Ref. 54400L

ice 2101

Unit with internal lighting with RGBW LED technology and remote control unit for switching colors. Available only in matte ice white finish. Remote control included.

LED RGBW DMX – Cable
Ref. 54400D

ice 2101

Unit with internal lighting with RGBW LED technology and remote control unit for switching colors. Also controlLED by DMX-1024 (wireless), enabling communication between one or more products simultaneously via the DMX transmitter (not included). There are two options to choose from: Professional XLR DMX and Home WIFI DMX. (Remote control included).
Optional battery

LED RGBW – Battery
Ref. 54400Y

ice 2101

Unit with internal lighting with battery-powered RGBW LED technology. Includes charger and remote control for switching colors and charger. Available only in matte ice white finish.
LED RGBW DMX – Battery

Ref. 54400DY

ice 2101

Unit with internal lighting with RGBW LED technology and remote control unit for switching colors. Also controlLED by DMX-1024 (wireless), enabling communication between one or more products simultaneously via the DMX transmitter (not included). There are two options to choose from: Professional XLR DMX and Home WIFI DMX. (Remote control included).

Ambients