# Faz xl planter 82x63x60

by Ramón Esteve

A commitment to minimalist aesthetics, Faz is a sleek and contemporary ensemble of outdoor furniture and planters designed by Ramón Esteve for Vondom. Esteve's creative vision for Faz transcends mere functionality and aims to integrate and harmonize with different spaces, be they residential or expansive installations. Through a deliberate selection of materials and the strategic incorporation of lighting elements, Ramón Esteve has created an atmosphere that exudes serenity, timelessness and an universality. His ability to blend form and function creates an immersive experience where the boundaries between indoors and outdoors are blurred, leaving behind only an impression of cohesive elegance. In short, he is the mastermind behind Faz's ambience.

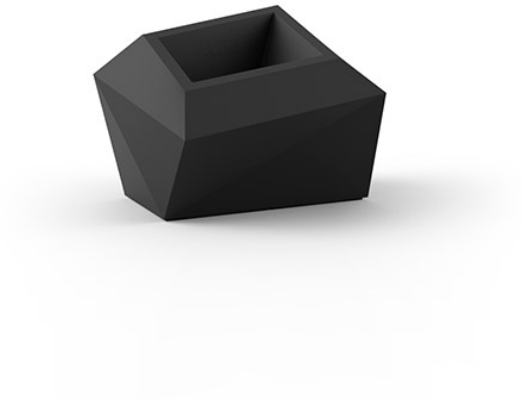

# Info

## Description

Pot made of polyethylene resin by rotational moulding. 100% Recyclable. Item suitable for indoor and outdoor use. Available in different finishes.

Weight: 12 Kg

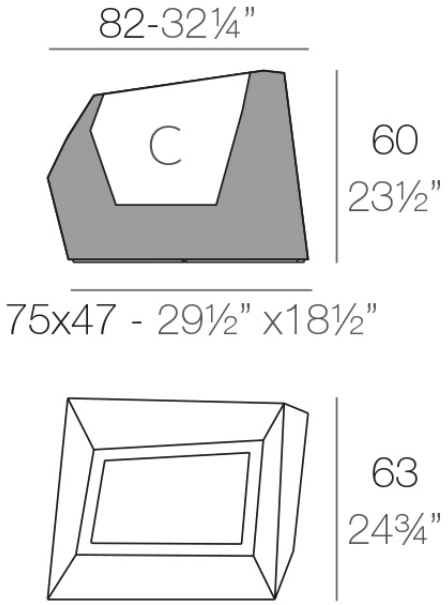


| | |
|---|---|
| FAZ Macetero bajo XL | C = 27 L |
| FAZ Down planter XL | C = 7 gal |

# Finishes

## finishes

### Basic
Ref. 54011A

### Matt Polyethylene

### Self-Watering
Ref. 54011R

VONDOM

white 2001

black 2002

ecru 2003

tortora 2004

gray 2005

anthracite 2006

brown 2008

garnet 2015

green 2016

cream 2017

blue 2018

camel 2020

clay 2022

ecru granite

cream granite

ice 2101

Self-watering system included in all planters except those with basic finish

## Lacquered
## Ref. 54011F

white 3101

black 3102

ecru 3103

tortora 3104

gray 3105

anthracite 3106

garnet 3113

green 3116

cream 3117

blue 3118

brown 3125

Lacquered Polyethylene

## lighting

Led – White
Ref. 54011W

ice 2101

White internally lit unit with LED technology. Available only in matte ice white finish.

LED RGBW – Cable
Ref. 54011L

ice 2101

Unit with internal lighting with RGBW LED technology and remote control unit for switching colors. Available only in matte ice white finish. Remote control included.

LED RGBW DMX – Cable
Ref. 54011D

ice 2101

Unit with internal lighting with RGBW LED technology and remote control unit for switching colors. Also controlLED by DMX-1024 (wireless), enabling communication between one or more products simultaneously via the DMX transmitter (not included). There are two options to choose from: Professional XLR DMX and Home WIFI DMX. (Remote control included).
Optional battery

LED RGBW – Battery
Ref. 54011Y

ice 2101

Unit with internal lighting with battery-powered RGBW LED technology. Includes charger and remote control for switching colors and charger. Available only in matte ice white finish.

LED RGBW DMX – Battery
Ref. 54011DY

ice 2101

Unit with internal lighting with RGBW LED technology and remote control unit for switching colors. Also controlLED by DMX-1024 (wireless), enabling communication between one or more products simultaneously via the DMX

transmitter (not included). There are two options to choose from: Professional XLR DMX and Home WIFI DMX. (Remote control included).

## plato

Ref. 42992

## ruedas

Ref. 53026

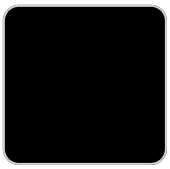

black 2002

VONDOM

# Ambients