KAMI S521

Mario Ferrarini | 2023

KAMI

Mario Ferrarini | 2023

When objects are born playing, they always have something extra. A freshness, a spontaneity, that certain something. Playing with a piece of paper, folding it according to the principles of origami, Mario Ferrarini has created a stool of extreme originality and versatility, which elegantly expands the Lapalma collection. KAMI, Japanese for 'sheet of paper', is a form of pure seduction that combines fantasy and functionality, softness, resistance and comfort. The raw material is plywood that meekly follows the lines of the design and its three-dimensional realisation. The opening in the centre, which during moulding allows for the folding and counter-folding of the seat and legs, becomes a comfortable grip and emphasises the welcoming 'cradle' profile. Easily stackable, KAMI follows us everywhere like a notebook in which to jot down moments of relaxation and creativity every day.

KAMI

Mario Ferrarini | 2023

S521 stool made entirely of curved plywood

Nesting stool in moulded plywood. Available in blanched oak, stained dark walnut or black open pore.

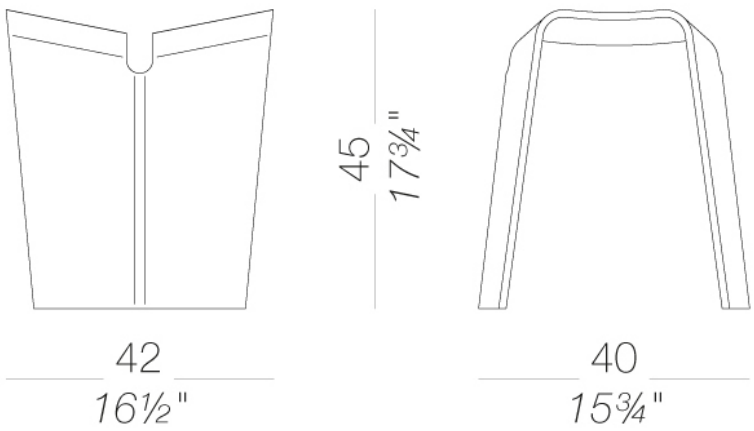

KAMI S521

Mario Ferrarini | 2023

frame

wood
lacquered open pore
15 Colors

wood
blanched oak
1 Colors

wood
oak dark walnut
1 Colors

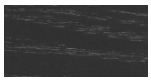

wood
black open pore
1 Colors

KAMI S521

Mario Ferrarini | 2023

consult the porfolio for the range of colors, fabrics, eco-leather, soft-leather.

use and maintenance instructions
Clean all parts in wood, leather, fabric and metal with a damp cloth or a diluted neutral cleaner. Do not use cleaners with alcohol, bleach, solvent or abrasive products. Any liquid spilt on the product must be wiped up immediately.When lifting or moving the product, hold it on the structure and not under the seat. The product should not be subjected to unbalanced weights, as it is designed for a proper rest on the foothold (on four legs or on the base). Our company relieves from any responsibility in case of damage caused to fragile floors. Avoid any improper use of the product: do not step on the product, on the footrest or on the armrests. Avoid any movements that could compromise the proper functionality of the product or the safety of the users.Wood and leather, being natural materials, could be easily damaged. Small impurities or imperfections are within quality standard range.Do not expose the product to weather conditions or atmospheric agents, nor to heat sources over 40°C. Also products for outdoor use could be afflicted by atmospheric agents. The product could undergo possible exterior changes due to particular exposure to heat, humidity and saltiness. An appropriate and frequent maintenance and cleaning of the product enhances its durability. The product could change colour and shade, if exposed to direct sunlight. Maintenance has to be carried out by experienced staff. Dispose of the package only after assembling the product, in order to avoid the loss of ironmongery and components. Once the product has been dismantled, the product itself or its components must be given to the public garbage disposal system, according to the legislation in force.