# Faz wood high table 50x50x105

by Ramón Esteve

A commitment to minimalist aesthetics, Faz is a sleek and contemporary ensemble of outdoor furniture and planters designed by Ramón Esteve for Vondom. Esteve's creative vision for Faz transcends mere functionality and aims to integrate and harmonize with different spaces, be they residential or expansive installations. Through a deliberate selection of materials and the strategic incorporation of lighting elements, Ramón Esteve has created an atmosphere that exudes serenity, timelessness and an universality. His ability to blend form and function creates an immersive experience where the boundaries between indoors and outdoors are blurred, leaving behind only an impression of cohesive elegance. In short, he is the mastermind behind Faz's ambience.

# Info

## Description

Weight: 9.74 Kg

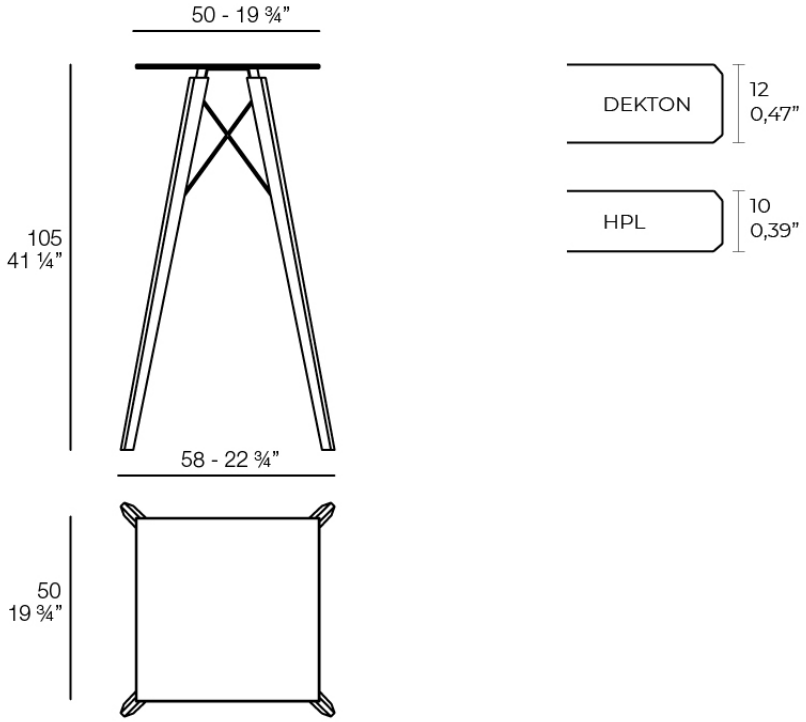


FAZ WOOD Mesa Alta 50 x 50
FAZ WOOD Dinning table 19 ¾ x 19 ¾”

# Finishes

## tabletops

HPL Black Edge Top
Ref. 54315

| | | |
|---|---|---|
| white | black | ecru |

HPL black edge

HPL Solid Core Top
Ref. 54315B

| | | |
|---|---|---|
| white | black | ecru |

HPL solid core

## legs

Ash
Ref. VVAR03082

VONDOM

wood 1

wood 2

# tabletops

## HPL Black Edge Top
## Ref. VVAR03251

white(black edge)

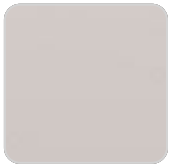
ecru(black edge)

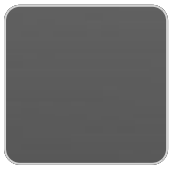
black(black edge)

## HPL Solid Core Top
## Ref. VVAR03253

white (white edge)

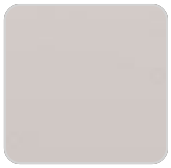
ecru

tortora

smoked

cream

garnet

brown

green

blue

anthracite

white stone

ecru stone

tortora stone

gray stone

black stone

# Ambients