Faz bar stool 50x51x111cm

by Ramón Esteve

A commitment to minimalist aesthetics, Faz is a sleek and contemporary ensemble of outdoor furniture and planters designed by Ramón Esteve for Vondom. Esteve's creative vision for Faz transcends mere functionality and aims to integrate and harmonize with different spaces, be they residential or expansive installations. Through a deliberate selection of materials and the strategic incorporation of lighting elements, Ramón Esteve has created an atmosphere that exudes serenity, timelessness and an universality. His ability to blend form and function creates an immersive experience where the boundaries between indoors and outdoors are blurred, leaving behind only an impression of cohesive elegance. In short, he is the mastermind behind Faz's ambience.

VONDOM

Info

Description

Weight: 7.62 Kg

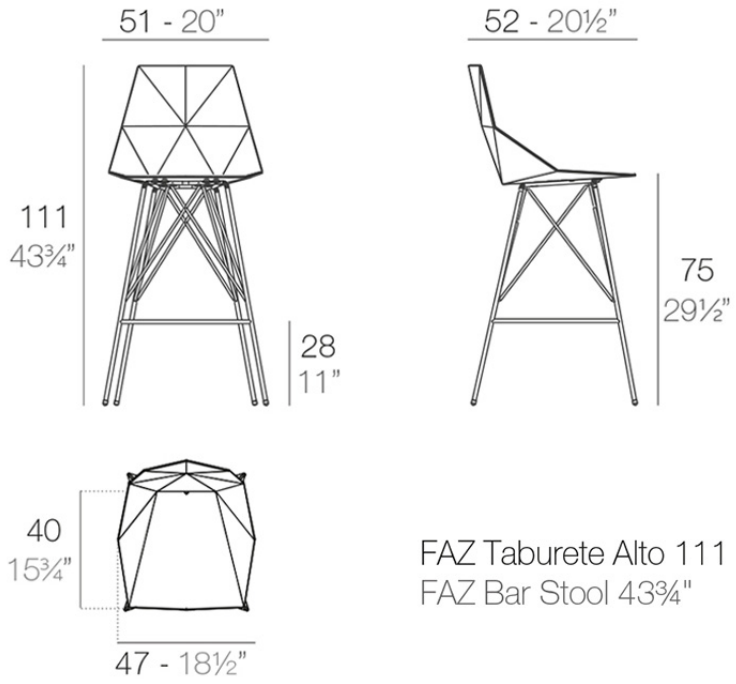

Finishes

finishes

Basic
Ref. 54162

white

black

ecru

Available in various colors

estructura

Aluminium
Ref. VVAR02123

white

black

ecru

Ref. VVAR02123

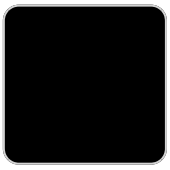
gray

VONDOM
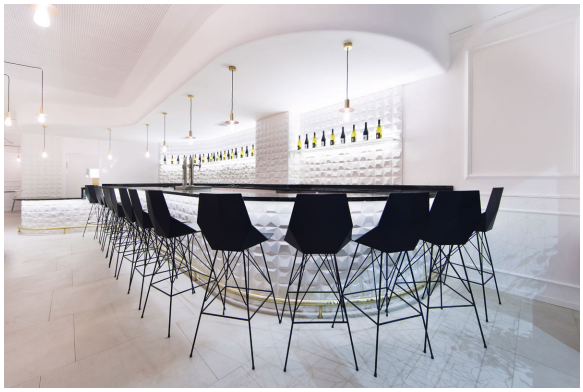
Ambients