Ufo coffee table 100x100x28

by Ora Ïto

The UFO design furniture collection, designed by Ora Ïto for Vondom, is the outcome of “genetic mutation experiments” between the iconic languages of pagodas and UFOs. One of its distinctive features is the contrast created by the **negative and positive shapes**.

Info

Description

Made of polyethylene resin by rotational moulding. 100% Recyclable. Item suitable for indoor and outdoor use. Available in different finishes.

Weight: 21 Kg

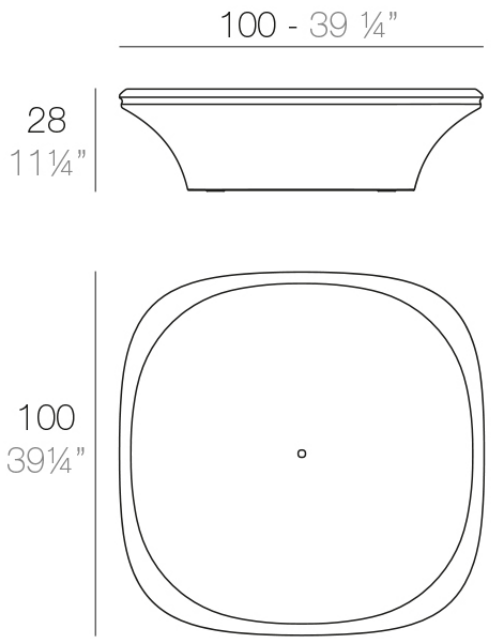

UFO Mesa Baja
UFO Low Table

Finishes

finishes

Basic
Ref. 63003

Matt Polyethylene

Lacquered
Ref. 63003F

VONDOM

Lacquered Polyethylene

lighting

Led – White
Ref. 63003W

White internally lit unit with LED technology. Available only in matte ice white finish.

LED RGBW – Cable
Ref. 63003L

ice 2101

Unit with internal lighting with RGBW LED technology and remote control unit for switching colors. Available only in matte ice white finish. Remote control included.

LED RGBW DMX – Cable
Ref. 63003D

ice 2101

Unit with internal lighting with RGBW LED technology and remote control unit for switching colors. Also controlLED by DMX-1024 (wireless), enabling communication between one or more products simultaneously via the DMX transmitter (not included). There are two options to choose from: Professional XLR DMX and Home WIFI DMX. (Remote control included).
Optional battery

LED RGBW – Battery
Ref. 63003Y

ice 2101

Unit with internal lighting with battery-powered RGBW LED technology. Includes charger and remote control for switching colors and charger. Available only in matte ice white finish.
LED RGBW DMX – Battery

Ref. 63003DY

ice 2101

Unit with internal lighting with RGBW LED technology and remote control unit for switching colors. Also controlLED by DMX-1024 (wireless), enabling communication between one or more products simultaneously via the DMX transmitter (not included). There are two options to choose from: Professional XLR DMX and Home WIFI DMX. (Remote control included).

tabletops

TEMPERED GLASS
Ref. 63003C

Security temperate Glass, board thickness 10 mm

tabletops

Ref. 63003C

Security temperate Glass, board thickness 10 mm

Ambients