FLOS

F6563009 White

Tab Table

Designed by Edward Barber and Jay Osgerby, 2011

9W - 347lm - 2700K - CRI> 80

Table lamp emitting indirect and diffused light. Silver powder-coated steel base with opaline extruded polymethylmethacrylate (PMMA) diffuser column. Adjustable head rotates by ±90°. On/off control of the two light sources located at either end of the column and managed via a double foot switch on the power cable.

Designed by Edward Barber and Jay Osgerby in 2011, Tab Table was sketched in minutes but developed over years, with the namesake tab added last. Driven by a desire to challenge conventions, the designers explored how familiar forms could be made in smarter, more original ways. Its sharp lines and adjustability reinterpret a classic typology, while the simplicity of its form contrasts with its technical precision. Part of the permanent collection at the Art Institute of Chicago and the Indianapolis Museum of Art.

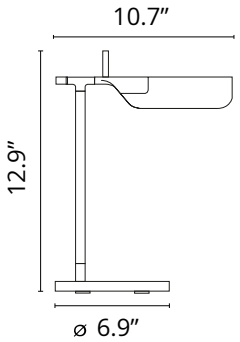

Are you a professional and your project needs consulting and support?

BOOK AN APPOINTMENT

Main specifications

EAN	8059607031599
Mounting	Table
Environments	Indoor dry location
Light Source Type	LED
Light sources included	Yes
LED type	LED Module
Power (W)	9
System flux (lm)	347

Physical

Color	White
Length (in)	6.89
Cord color	White
Net weight (lb)	2.42
Gross weight (lb)	3.86
Package height (in)	7.48
Package width (in)	12.6
Package length (in)	16.14
Package volume (in)	1521.21
IP internal	20

Download

Mounting instructions PDF

Mounting instructions PDF

Photometric Files

LDT / IES LDT

Technical Drawings

2D ZIP

©2026 Flos - P.IVA 00290820174 - 9/3/2026

In our constantly evolving world and business, technical upgrades happen every day. This means all product specifications and data are subject to change without warning in order t improve reliability, function, performance or otherwise. We make every effort to ensure the accuracy of our product images, however due to different lighting and screens used for viewing, the colours may vary. Images are indicative of the quality and style of the product but may not represent the precise details of the product you receive. This is because we are constantly working to make improvements. For aesthetic reasons, cables and/or electrical elements are often not shown. Refer to technical data sheets for all technical data. Images and colours are not part of any contract or warranty in any way.

IP 20

Ecodesign and Energy Labelling

This product contains a light source of energy efficiency class D

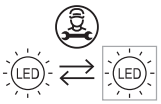

Replaceable (LED only) light source by a professional

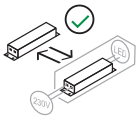

Replaceable control gear by an end-user

Schematic light drawing

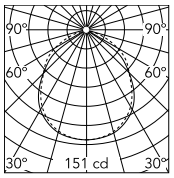

Luminous flux luminaire
347 lm

Photometric

Lighting type	Direct
Light distribution	Asymmetric
CCT (K)	2700
CRI>	80
Extreme cut off	No

Electrical

Insulation class	III
Frequency (Hz)	50/60
Main voltage (Vac)	100-240
Driver	Remote included
Dimmable	Yes
Dimming type	Electronic 24V
Dimming interface	Dimmer Integrated
Plug type	Type A, Type C, Type G
Batteries inside	No

©2026 Flos - P.IVA 00290820174 - 9/3/2026

In our constantly evolving world and business, technical upgrades happen every day. This means all product specifications and data are subject to change without warning in order t improve reliability, function, performance or otherwise. We make every effort to ensure the accuracy of our product images, however due to different lighting and screens used for viewing, the colours may vary. Images are indicative of the quality and style of the product but may not represent the precise details of the product you receive. This is because we are constantly working to make improvements. For aesthetic reasons, cables and/or electrical elements are often not shown. Refer to technical data sheets for all technical data. Images and colours are not part of any contract or warranty in any way.

Spare Parts

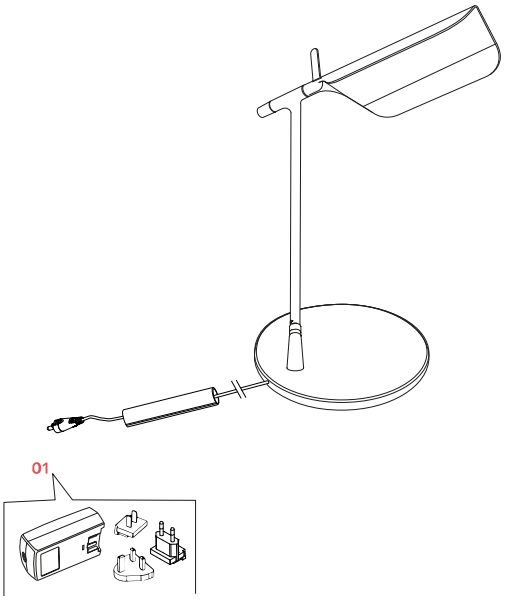

01.	White plug assembly kit & 24V driver	RF6600209

©2026 Flos - P.IVA 00290820174 - 9/3/2026

In our constantly evolving world and business, technical upgrades happen every day. This means all product specifications and data are subject to change without warning in order t improve reliability, function, performance or otherwise. We make every effort to ensure the accuracy of our product images, however due to different lighting and screens used for viewing, the colours may vary. Images are indicative of the quality and style of the product but may not represent the precise details of the product you receive. This is because we are constantly working to make improvements. For aesthetic reasons, cables and/or electrical elements are often not shown. Refer to technical data sheets for all technical data. Images and colours are not part of any contract or warranty in any way.

RF6600209

White plug assembly kit & 24V driver

©2026 Flos - P.IVA 00290820174 - 9/3/2026

In our constantly evolving world and business, technical upgrades happen every day. This means all product specifications and data are subject to change without warning in order t improve reliability, function, performance or otherwise. We make every effort to ensure the accuracy of our product images, however due to different lighting and screens used for viewing, the colours may vary. Images are indicative of the quality and style of the product but may not represent the precise details of the product you receive. This is because we are constantly working to make improvements. For aesthetic reasons, cables and/or electrical elements are often not shown. Refer to technical data sheets for all technical data. Images and colours are not part of any contract or warranty in any way.