STRATOS Keramik Premium

Product description

Table with base in titanium (GFM11), bronze (GFM18), graphite (GFM69) or black (GFM73) embossed lacquered steel. Top in ceramic Marmi Alabastro (KM02), matt Golden Calacatta (KM05), glossy Golden Calacatta (KM06), matt Portoro (KM07), glossy Portoro (KM08), glossy Sahara Noir (KM09), Makalu (KM11), Breccia (KM12), Borghini Calacatta opaco (KM18), Borghini Calacatta lucido (KM19), Colosseo (KM21), Andromeda (KM22), matt Invisible (KM24), Taj Mahal (KM26), Giava (KM27), Darwin (KM28) or Luxor (KS23) with Brushed Bronze or Brushed Grey lacquered and rounded lower profile. 6cm thick top on 300x128 version and 5cm on 200x120 and 240x120 versions. Colour and brushing variations of the Brushed finish are characteristics of the handcrafted processing and should not be considered as defects.

Note

Keramik Premium top, REGISTERED DESIGN

CATTELAN ITALIA s.p.a. - Via Pilastri 19, 36030 Carrè, Vicenza, Italy - Phone: +390445318711 - Fax: +390445314289 - E-mail: info@cattelanitalia.com - www.cattelanitalia.com

STRATOS Keramik Premium

Dimensions

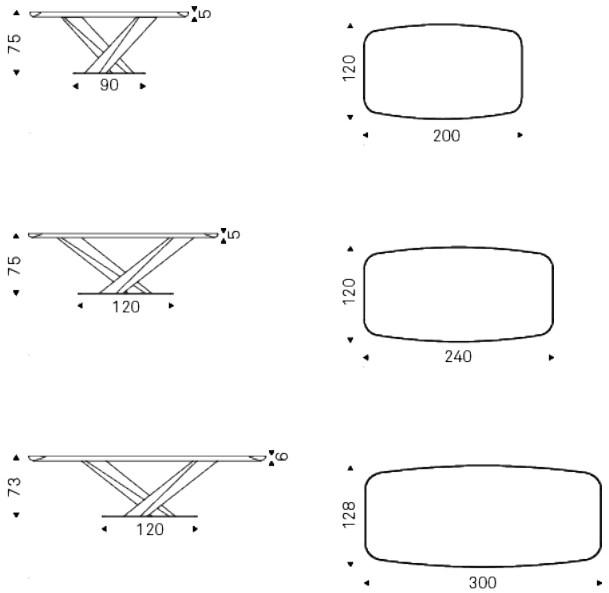

CATTELAN ITALIA s.p.a. - Via Pilastri 19, 36030 Carrè, Vicenza, Italy - Phone: +390445318711 - Fax: +390445314289 - E-mail: info@cattelanitalia.com - www.cattelanitalia.com

STRATOS Keramik Premium

base

metal

GFM11 titanium embossed

GFM18 bronze embossed

GFM69 graphite embossed

GFM73 black embossed

profile

wood

brushed bronze

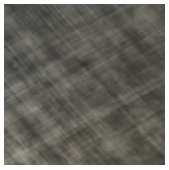
brushed grey

top

KS ceramic

KS23 Luxor

Marmi ceramic

KM02 Alabastro

KM05 matt Golden Calacatta

KM06 glossy Golden Calacatta

KM07 matt Portoro

KM08 glossy Portoro

KM09 glossy Sahara Noir

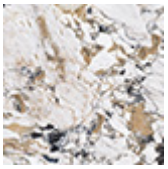
KM11 Makalu

KM12 Breccia

KM18 matt Borghini Calacatta

KM19 glossy Borghini Calacatta

KM21 Colosseo

KM22 Andromeda

KM24 matt Invisible

KM26 Taj Mahal

KM27 Giava

KM28 Darwin

CATTELAN ITALIA s.p.a. - Via Pilastri 19, 36030 Carrè, Vicenza, Italy - Phone: +390445318711 - Fax: +390445314289 - E-mail: info@cattelanitalia.com - www.cattelanitalia.com

GENERAL TERMS AND MAINTENANCE

The **SOFT LEATHER** is a natural material. A non uniformity in the wrinkle's drawing and small defects must be considered a feature that certifies the quality of leather. The leather undergo over time a slight discoloration, either with exposure to direct sunlight or to sources of heat. Be careful with straps, studs, buttons or other sharp metal objects that could scar the surfaces.
MAINTENANCE: It is a good practice to remove the dust, which often clogs the pores, not allowing the natural perspiration. Always use a soft, dry cloth. Avoid using brushes that can damage the surface. The removal of stain is extremely difficult as in the case of grease spots, ink and alcohol. Good results can be obtained by acting promptly with soapy water or mild detergent, rinse and wipe dry immediately with a soft cloth. Avoid alcohol, acetone, trichlorethylene, detergents or abrasives.

CATTELAN ITALIA **LEATHERS** are produced with selected cow leathers, tanned and dyed with products that do not contain substances harmful to human health, in full compliance with the current regulations.
MAINTENANCE: see the instructions for the soft leather.

The **SYNTHETIC LEATHER, SYNTHETIC NUBUCK and MICRO NUBUCK**is a special ecological fabric similar to leather or hide even if not realized with animal material. Has excellent physiological and hygienic qualities and is harmless from the toxicological point of view. It does not cause dust allergies. High resilience is finally a good guarantee of durability.
MAINTENANCE: requires no special care. In case of stains wipe with a damp cloth. Use neutral specific products. Do not use brushes, grease, petrol or acetone which will damage the surfaces.

FABRICS With regard to fiber composition, technical specifications and maintenance instructions, please find information on our website www.cattelanitalia.com Finishes section.

PAINT, LACQUER and EMBOSSED PAINTthe main features are light and corrosion resistant. The embossed painting also makes the surface more resistant to scratches, thanks to its grainy film.
MAINTENANCE: For normal cleaning, use a slightly damp soft cloth. Do not use abrasive cleaners, solvents, ammonia, acetone. In case of stains, remove them with a solution of mild soap and water, taking care to dry the wet surfaces.

The **WOOD** that is used for all CATTELAN ITALIA products is sourced only from the finest ecologically sustainable forest plantations and each piece has been treated using the least invasive processes as not to affect its natural beauty, but importantly guarantees the longevity and durability over the years of use. Wood is a natural material and as such, it will continue to change in appearance which will further enhance its natural look. Minor variations of tone, the presence of knots, veins and burn marks are all testament to the uniqueness and authenticity that each piece of wood will possess.
MAINTENANCE: Please read the care instructions for lacquer.

LAMINATE is a material highly resistant to shocks, water, steam, heat, stains, light, and chemical agents.
MAINTENANCE: To remove stubborn stains use a damp cloth with water and liquid detergent.

MARBLE and NATURAL STONES are protected by a layer of water-oil repellent that protects surfaces. The lead polishing gives to the slab's surface gloss and resistance to light and hard weather conditions, which gives a guarantee of excellent durability.
MAINTENANCE: For proper cleaning and surface protection of natural stone or granite use specific products according to their use. Do not use harsh detergents that can dull the surface and affect the water-oil repellent treatment. It is advisable to clean, protect and polish only with specific products for natural stone or granite for a long-term durability

The making of the **CERAMIC** used for all CATTELAN ITALIA ceramic tables is an innovative process. It begins with the wet grinding of natural materials such as clay, granite and ceramic particles that are in powder form, which then are all compacted down together in a process known as 'firing'.
MAINTENANCE: Ceramic tops should be cleaned with a wet sponge and a mild detergent. Do not use abrasive cleaning products. Do not use a steam cleaner. For best results, it is recommended that you use a limestone cleaning gel. It is best to remove fresh stains as quickly as possible as there is the potential risk that over time the stain can penetrate the pores of the ceramic. In the event that a stain has been present on the ceramic for some time, use a solution mixed from bicarbonate soda and water. Rub the surface, allowing the solution to penetrate the stain, and then wipe it off with a wet sponge.

CLAY is a thin, multi-layer coating and each layer is applied manually with a spatula and naturally dried. The processing is completed with a last protective coating to preserve the surface and the natural opacity of the material. Natural colours and finishes are the result of soils mixing during the production process of clay and its mixtures. The appearance of imperfections is to be considered as a distinctive feature of the hand-worked material.
MAINTENANCE: protect the surface from falling blunt objects, avoid direct contact with flames or very hot objects. For daily cleaning, use a soft cloth with water and mild neutral detergents and dry the surface with a soft cloth or absorbent paper. Remove food residues, liquids or greases within a few hours to avoid permanent stains.

GLASS, CRYSTALART and MIRRORS, all glass, tempered or not, have safety features such as to match the requirements.
MAINTENANCE: Avoid using abrasive materials that can damage the surface permanently. For the mirrors, it is recommended to use only a soft cloth dampened with alcohol.

POLYURETHANE belongs to a large class of compounds called polymers. Polyurethane is made through a process known as 'condensation' which allows the polyurethane to be moulded into any shape. Once the process of condensation is complete and the desired shape has been formed, the end result is that the shaped cannot be unchanged. As a result and by using the right elements, the desired requirement of softness and comfort can be met.
MAINTENANCE: For normal cleaning, use a damp cloth. Do not use abrasive cleaning products such as ammonia or solvents. To remove spots, use a solution mixed from water and mild soap and ensure that you dry the affected area immediately after wiping it.

INSTRUCTIONS

If you must assemble components, follow all instructions included in the packaging. Screws, bolts and other fastening parts should preferably be tightened by hand. Do not use power tools. In case of difficulty, please contact your dealer for any assistance. Do not use the product for uses other than those related to the category it belong.

DISPOSAL

After use do not dispose of the furniture in the environment. Entrust to specialized companies for the recovery and / or disposal.

WARRANTY

This Certificate of Guarantee apply to all CATTELAN ITALIA products, and is valid only in cases where the item purchased is defective or fails to fulfil compliance to the objective descriptions and aspects of quality and performance made by the seller or the producer. The warranty applies to the product up to 2 years after delivery (unless otherwise provided by national legislation). The warranty is supplied at the moment of the sale and is valid only in the presence of data and stamp of the dealer, the bill of lading or receipt. The warranty is valid only for defects of conformity existing at the delivery thereof and excludes any other type of defect source later if not objectively recognized. Are also excluded from application of the Warranty Certificate the following aspects: transport damage, damage or breakdown products as a result of improper handling and / or storage at the warehouse store or distributor, faults and deterioration from use, scratches and abrasions, stains, exposure to water, direct sunlight, excessive heat or cold, vandalism, misuse, misapplication and / or incorrect use of the product, improper handling of materials. Are also excluded from the guarantee products made from materials supplied by the customer and tampering or attempted repair of the goods without written permission by CATTELAN ITALIA

These information are based on data published in our latest online pricelist. Cattelan Italia reserves the right to change or improve any product without any notice.