LYT | T85

Klaus Nolting | 2024

LYT

Klaus Nolting | 2024

The uniqueness of an object lies in its wealth of functions. The new table by Klaus Nolting, created for Lapalma, combines three uses in an elegant, contemporary and linear design. Boasting an off-centre leg, LYT is a versatile table that can be easily matched with armchairs and sofas. It is a practical and stylish addition to various contexts, including hotel coffee bars, airport lounges and living rooms at home. LYT also offers a charging point for smartphones and tables, incorporated into the top and powered via cable. With a LED light discreetly inserted under the top, with integrated battery power, LYT transforms into a gentle, adjustable light for the bedroom. Also surprising in its variety of versions, LYT is available with a top in American walnut, bleached oak or open-pore black, in white or black laminate, and in different lacquered colours.

LYT

Klaus Nolting | 2024

| T85 Battery-powered light table

Rechargeable light table with dimmable LED light and integrated batteries. Powder-coated metal base and column in various colours. Top in various finishes. Ground base with felt.

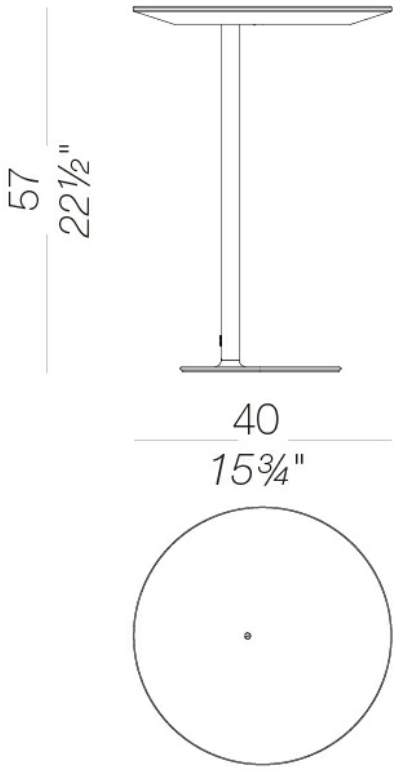

LYT | T85

Klaus Nolting | 2024

top

wood
lacquered
16 Colors

wood
lacquered open pore
14 Colors

wood
blanched oak
1 Colors

wood
black open pore
1 Colors

wood
Canaletto walnut
1 Colors

HPL 10 mm
black HPL fenix
1 Colors

HPL 10 mm
white HPL fenix
1 Colors

lacquered
white lacquered
1 Colors

frame

metal
powder coating
16 Colors

LYT | T85

Klaus Nolting | 2024

consult the porfolio for the range of colors, fabrics, eco-leather, soft-leather.

use and maintenance instructions
Clean all parts in wood, leather, fabric and metal with a damp cloth or a diluted neutral cleaner. Do not use cleaners with alcohol, bleach, solvent or abrasive products. Any liquid spilt on the product must be wiped up immediately.When lifting or moving the product, hold it on the structure and not under the seat. The product should not be subjected to unbalanced weights, as it is designed for a proper rest on the foothold (on four legs or on the base). Our company relieves from any responsibility in case of damage caused to fragile floors. Avoid any improper use of the product: do not step on the product, on the footrest or on the armrests. Avoid any movements that could compromise the proper functionality of the product or the safety of the users.Wood and leather, being natural materials, could be easily damaged. Small impurities or imperfections are within quality standard range.Do not expose the product to weather conditions or atmospheric agents, nor to heat sources over 40°C. Also products for outdoor use could be afflicted by atmospheric agents. The product could undergo possible exterior changes due to particular exposure to heat, humidity and saltiness. An appropriate and frequent maintenance and cleaning of the product enhances its durability. The product could change colour and shade, if exposed to direct sunlight. Maintenance has to be carried out by experienced staff. Dispose of the package only after assembling the product, in order to avoid the loss of ironmongery and components. Once the product has been dismantled, the product itself or its components must be given to the public garbage disposal system, according to the legislation in force.