Fiesta

by Archirivolto Design

FIESTA, a designer bar counter by **Archirivolto** for **VONDOM**: “design is beauty, harmony and freedom and cannot therefore be bound by strict, pre-established rules, nor can it only be seen as the privilege of social or cultural elite”.

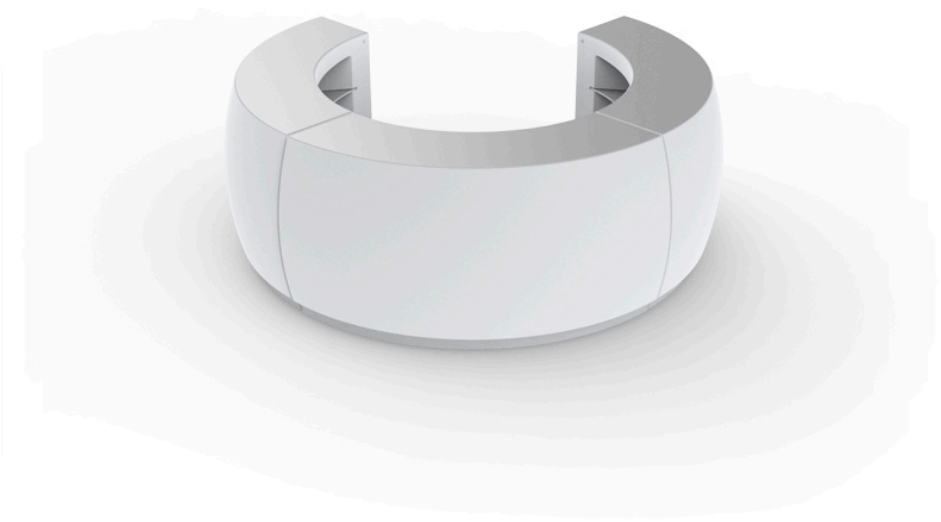

Info

Description

Made of polyethylene resin by rotational moulding.100% Recyclable. Item suitable for indoor and outdoor use. Available in different finishes.

Modules

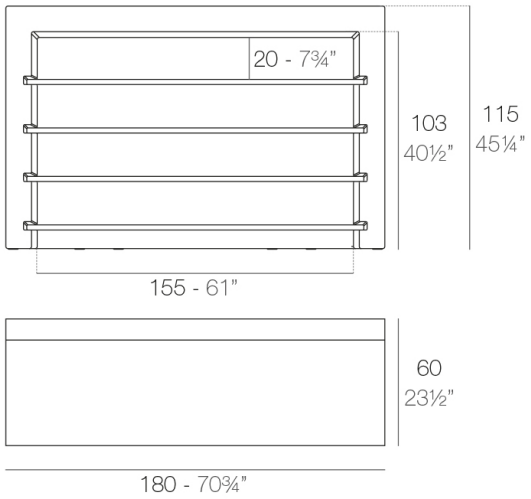

FIESTA 180 Barra
FIESTA 180 Counter

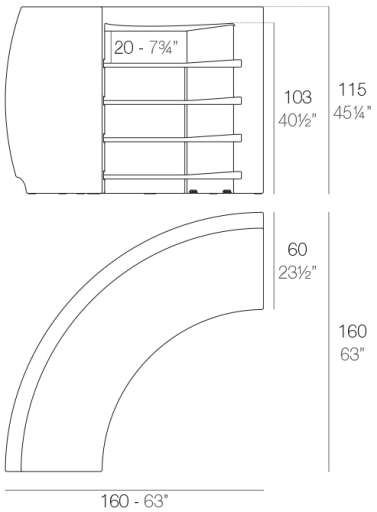

FIESTA Barra curva
FIESTA Curved counter

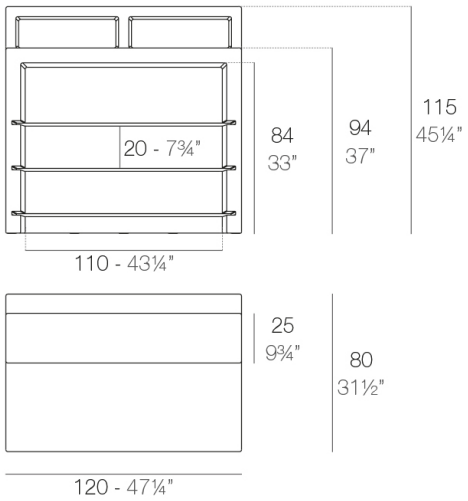

FIESTA 120 Barra
FIESTA 120 Counter

Combinations

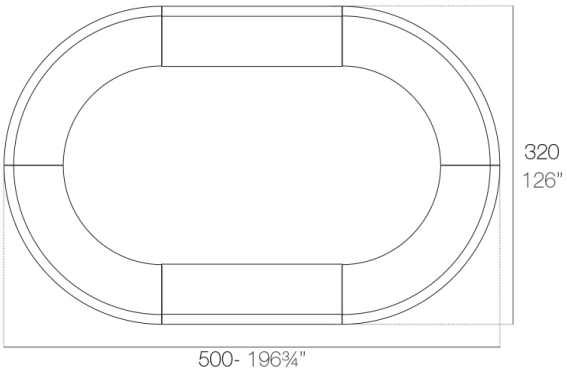

2 x 56001 180 Barra - 180 Counter
4 x 56002 Barra curva - Curved counter

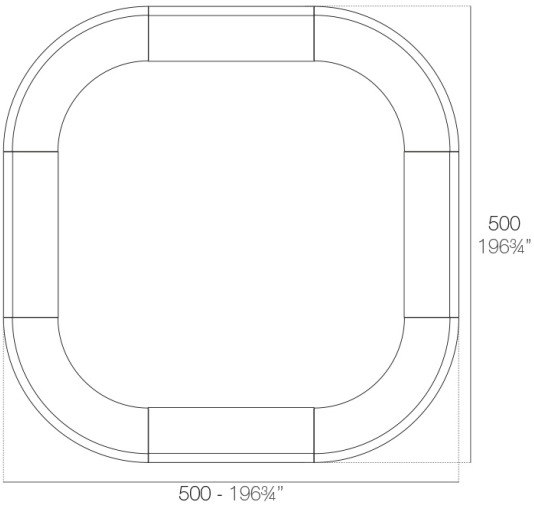

4 x 56001 180 Barra - 180 Counter
4 x 56002 Barra curva - Curved counter

VONDOM

Finishes

finishes

Basic

white 2001

black 2002

ecru 2003

tortora 2004

gray 2005

anthracite 2006

brown 2008

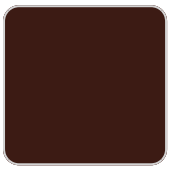
garnet 2015

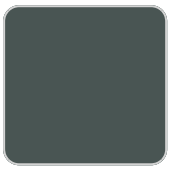
green 2016

cream 2017

blue 2018

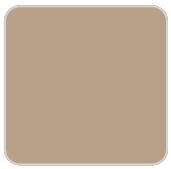
camel 2020

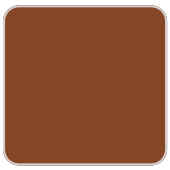
clay 2022

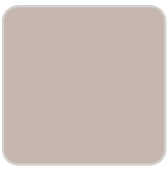
ecru granite

cream granite

ice 2101

Matt Polyethylene

Lacquered

VONDOM

white 3101

black 3102

ecru 3103

tortora 3104

gray 3105

anthracite 3106

garnet 3113

green 3116

cream 3117

blue 3118

brown 3125

Lacquered Polyethylene

lighting

Led – White

ice 2101

White internally lit unit with LED technology. Available only in matte ice white finish.

LED RGBW – Cable

ice 2101

Unit with internal lighting with RGBW LED technology and remote control unit for switching colors. Available only in matte ice white finish. Remote control included.

LED RGBW DMX – Cable

ice 2101

Unit with internal lighting with RGBW LED technology and remote control unit for switching colors. Also controlLED by DMX-1024 (wireless), enabling communication between one or more products simultaneously via the DMX transmitter (not included). There are two options to choose from: Professional XLR DMX and Home WIFI DMX. (Remote control included).
Optional battery

LED RGBW – Battery

ice 2101

Unit with internal lighting with battery-powered RGBW LED technology. Includes charger and remote control for switching colors and charger. Available only in matte ice white finish.

LED RGBW DMX – Battery

ice 2101

Unit with internal lighting with RGBW LED technology and remote control unit for switching colors. Also controlLED by DMX-1024 (wireless), enabling communication between one or more products simultaneously via the DMX transmitter (not included). There are two options to choose from: Professional XLR DMX and Home WIFI DMX. (Remote control included).

tabletops

HPL Black Edge Top

white (white edge)
white(black edge)
ecru(black edge)
ecru
tortora
smoked
cream
camel
clay
garnet
brown
green
ocean
blue
black(black edge)
gray
anthracite
white stone
cream stone
ecru stone

VONDOM

tortora stone

green stone

gray stone

black stone

oak1

oak2

walnut

HPL black edge

HPL Solid Core Top

white (white edge)

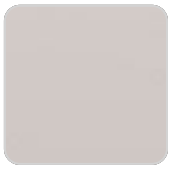
ecru

tortora

smoked

cream

camel

clay

garnet

brown

green

ocean

blue

gray

anthracite

white stone

cream stone

ecru stone

tortora stone

green stone

gray stone

black stone oak1 oak2 walnut

HPL solid core

Ambients