Vertex table

by Karim Rashid

KARIM RASHID's latest masterpiece can be witnessed in **VERTEX** – a range of contemporary and sculpted outdoor and indoor designer furniture collection created exclusively for the Spanish brand **VONDOM**.

Info

Description

Made of polyethylene resin by rotational moulding. 100% Recyclable. Item suitable for indoor and outdoor use. Available in different finishes. Tabletop with HPL.

Weight: 62.98 Kg

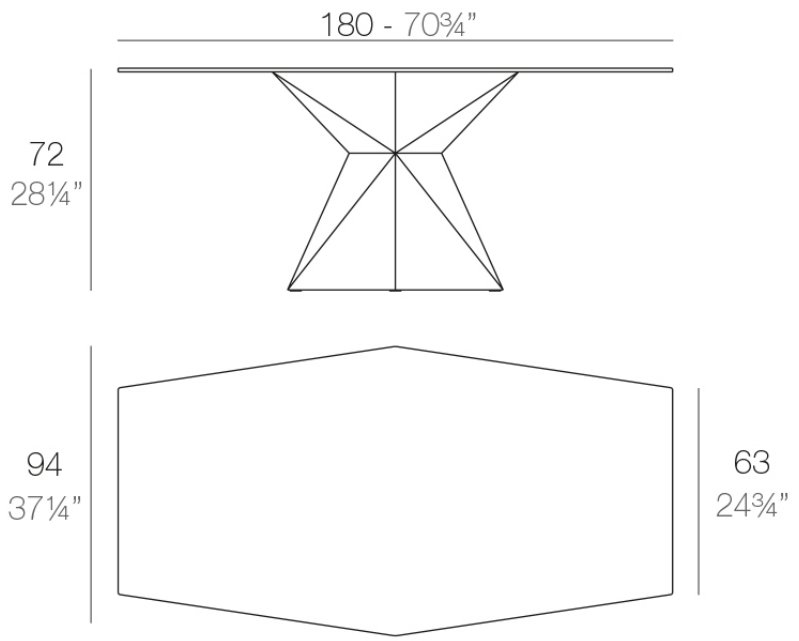

VERTEX Mesa 180
VERTEX Table 70¾"

Finishes

finishes

Basic
Ref. 51008

Matt Polyethylene

Lacquered
Ref. 51008F

VONDOM

Lacquered Polyethylene

lighting

Led – White
Ref. 51008W

White internally lit unit with LED technology. Available only in matte ice white finish.

LED RGBW – Cable
Ref. 51008L

ice 2101

Unit with internal lighting with RGBW LED technology and remote control unit for switching colors. Available only in matte ice white finish. Remote control included.

LED RGBW DMX – Cable
Ref. 51008D

ice 2101

Unit with internal lighting with RGBW LED technology and remote control unit for switching colors. Also controlLED by DMX-1024 (wireless), enabling communication between one or more products simultaneously via the DMX transmitter (not included). There are two options to choose from: Professional XLR DMX and Home WIFI DMX. (Remote control included).
Optional battery

LED RGBW – Battery
Ref. 51008Y

ice 2101

Unit with internal lighting with battery-powered RGBW LED technology. Includes charger and remote control for switching colors and charger. Available only in matte ice white finish.
LED RGBW DMX – Battery

Ref. 51008DY

ice 2101

Unit with internal lighting with RGBW LED technology and remote control unit for switching colors. Also controlLED by DMX-1024 (wireless), enabling communication between one or more products simultaneously via the DMX transmitter (not included). There are two options to choose from: Professional XLR DMX and Home WIFI DMX. (Remote control included).

tabletops

HPL Black Edge Top
Ref. VVAR00030

white(black edge)

ecru(black edge)

black(black edge)

HPL Solid Core Top
Ref. VVAR00219

white (white edge)

ecru

tortora

smoked

cream

VONDOM

camel

clay

garnet

brown

green

ocean

blue

gray

anthracite

white stone

cream stone

ecru stone

tortora stone

green stone

gray stone

black stone

oak1

oak2

walnut

Ambients