ARKETIPO / INDOOR

SOFA BACK PACK

designed by Giuseppe Vigano' 2022

STRUCTURE (seats and backs): wood.
SEAT UPHOLSTERY: multi-density expanded polyurethane foam (D30+Memory foam) covered with synthetic lining 230gr.
BACK UPHOLSTERY: multi-density expanded polyurethane foam (D30+D25) covered with synthetic lining 230gr.
BACKREST ROLL UPHOLSTERY: expanded polyurethane covered with coupled synthetic lining 180gr.
BACK CUSHION UPHOLSTERY (7110862): outer side in downproof 100% Gabardine 30/20 cotton cover; filling in goose feathers and polyester fibres.
BACK CUSHION UPHOLSTERY (7110863): outer side in downproof 100% Gabardine 30/20 cotton cover; filling in 100% goose feathers, inner core in expanded polyurethane (T18S).
SEAT HEIGHT: 37 cm.
BACK HEIGHT: 66 cm.
FEET: Pouf: plastic, h. 3 cm - Back: metal varnished micaceous brown, h. 1,5 cm.
SMALL TABLE: wood veneered in eucalyptus or zebrano.

Composition 'G' (seat unit A3 + seat unit B1 + seat unit C1 + no.2 backs S2 + no.1 back S3 + no.3 back cushions + no. 2 rolls + small table).

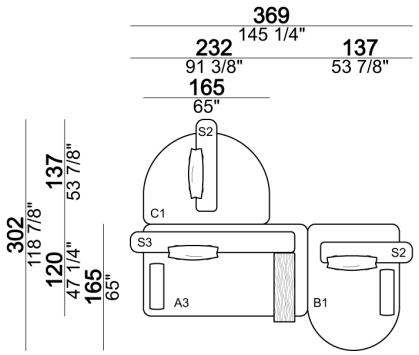

Back S2

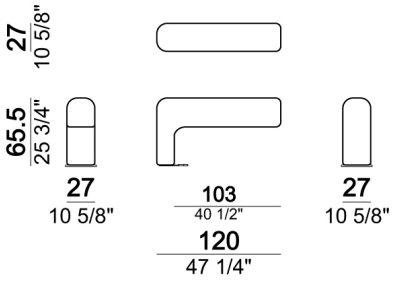

Composition 'F' (no. 2 seat units C1 + no.1 back S2 + no.2 back cushions + roll).

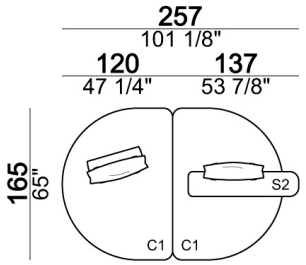

Back S3

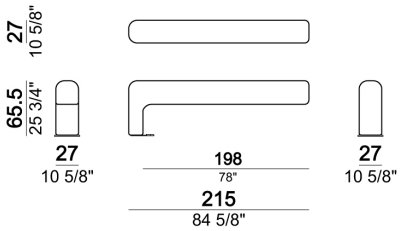

Small table

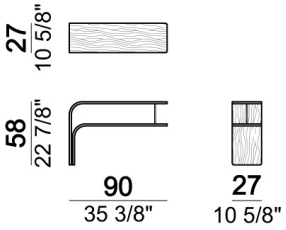

Composition 'E' (seat unit A3 + no.1 back S3 + no.2 back cushions + roll).

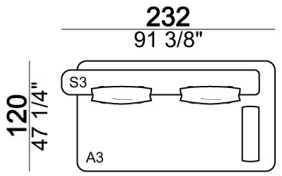

Back cushion

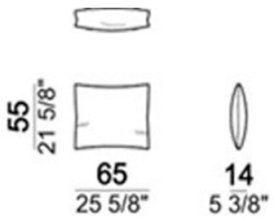

Composition 'B' (seat unit B1 + seat unit C1 + no.2 backs S2 + roll + no. 2 back cushions + small table).

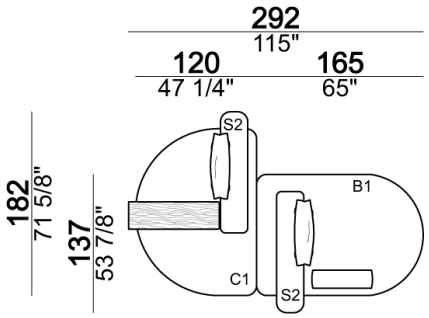

Roll for arm or back cushion support

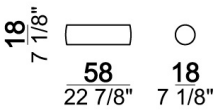

Composition 'L' (seat unit A3 + seat unit B1 + 1 back S2 + 1 back S3 + 2 back cushions 7110862 + 1 back cushion 7110863 + 1 roll + small table).

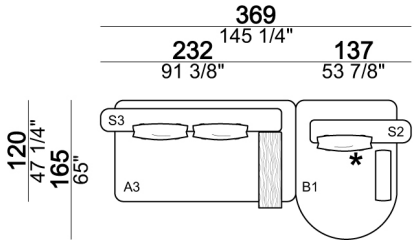

Back cushion

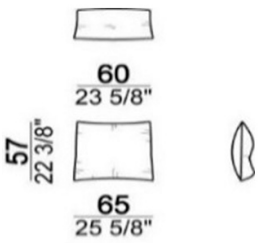

Seat unit A3

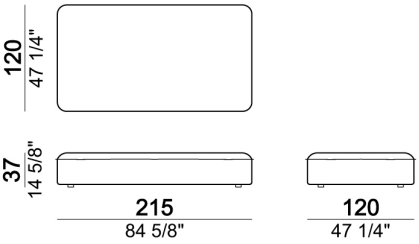

Composition 'D' (seat unit A2 + seat unit B1 + no.2 backs S2 + no.2 back cushions + roll).

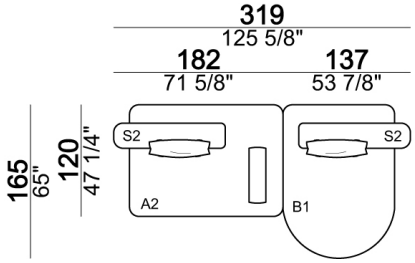

Composition 'C' (seat unit A2 + seat unit B1 + seat unit C1 + no.2 backs S2 + no.1 back S1 + roll + no.3 back cushions + small table).

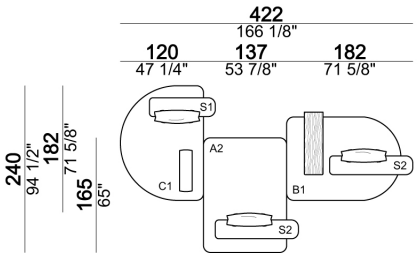

Composition 'A' (seat unit A3 + no.2 backs S2 + no.2 back cushions + small table).

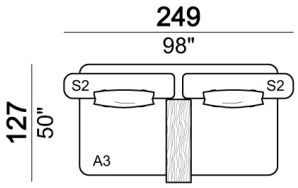

Composition 'H' (no.2 seat units A2 + no.2 seat units B1 + no.2 backs S2 +no.1 back S3 + no.5 back cushions + roll).

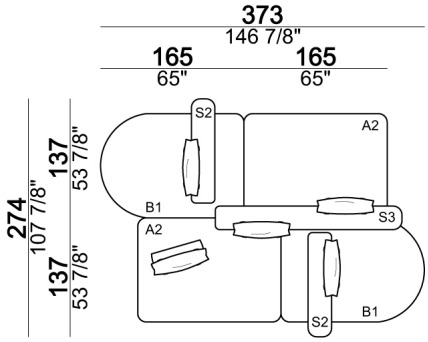

Seat unit A1

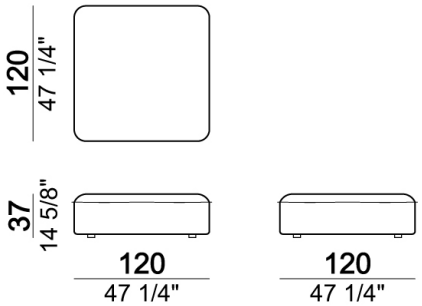

Seat unit C1

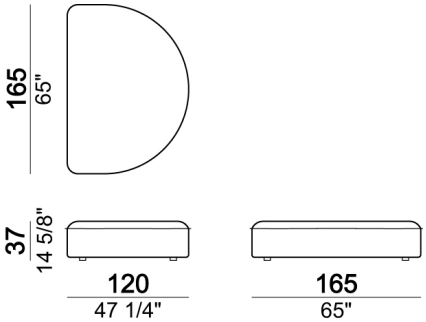

Seat unit B1

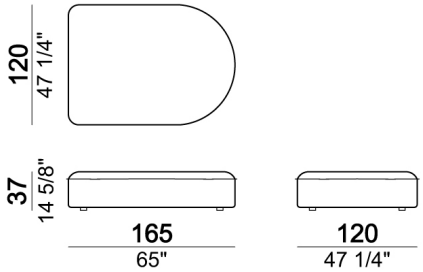

Back S1

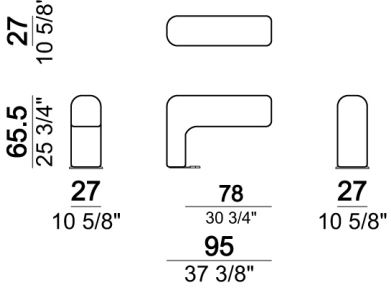
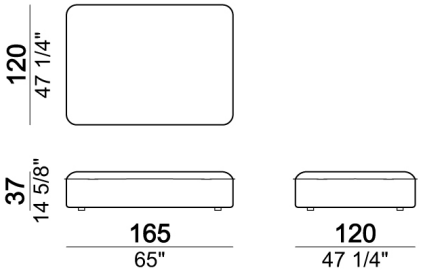
Seat unit A2