VONDOM

Mel low table 50cm

by Ramón Esteve

Mel explores the avant-garde from the everyday: enveloping shapes, tubular gestures, and a presence that lingers in the eye. With a sculptural and iconic character, its gentle, sinuous curves generate a strong visual identity while evoking the memory of wicker furniture—reinterpreted through a continuous, tubular, contemporary language.

Info

Description

Weight: 6.67 Kg

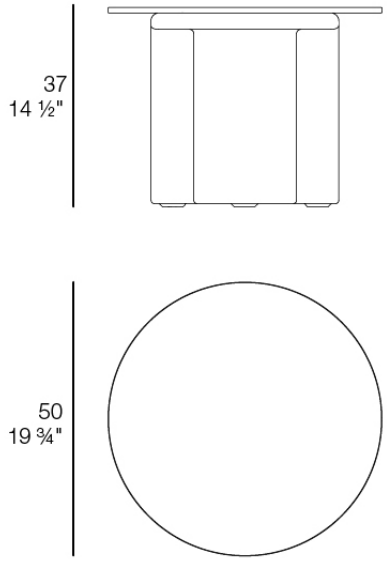

MEL Mesa Centro D50
MEL Low Table D19 ¾"
Ref. 66502

Finishes

finishes

Basic
Ref. 66502

white 2001

black 2002

ecru 2003

tortora 2004

gray 2005

anthracite 2006

brown 2008

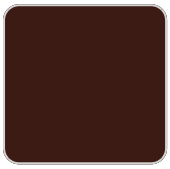
garnet 2015

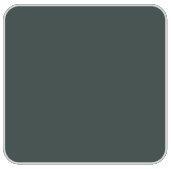
green 2016

cream 2017

blue 2018

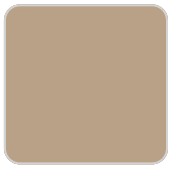
camel 2020

clay 2022

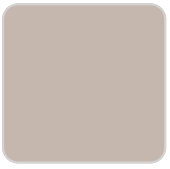
ecru granite

cream granite

ice 2101

Matt Polyethylene

Lacquered
Ref. 66502F

VONDOM

Lacquered Polyethylene

tabletops

HPL Solid Core Top
Ref. 66502TBL

VONDOM

cream stone

ecru stone

tortora stone

green stone

gray stone

black stone

oak1

oak2

walnut

Ambients