Venus planter ø 62×60

by Marcel Wanders

The Venus Collection is a stunning creation by visionary designer Marcel Wanders, exclusively for Vondom. With meticulous attention to detail, these contemporary planters feature captivating curves that effortlessly add character and personality to any setting, whether it's a sleek patio, stylish balcony or vibrant garden.
Crafted in Europe, these designer planters are not only functional, they are works of art that enhance the beauty of your outdoor space. Perfect for anyone who appreciates contemporary design, the Venus collection transforms any environment into a sophisticated oasis while accommodating a variety of plant sizes. Enhance your outdoor spaces with these exquisite planters that seamlessly blend elegance and innovation.

Info

Description

Weight: 9.02 Kg

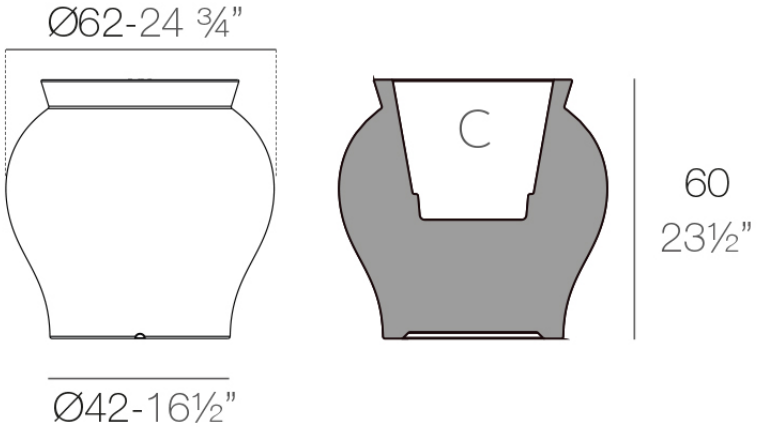

VENUS Macetero 60 cm C = 25 L
VENUS Planter 23 ½” C = 6½ gal

Finishes

finishes

Basic
Ref. 67022A

Matt Polyethylene

Self-Watering
Ref. 67022R

VONDOM

white 2001

black 2002

ecru 2003

tortora 2004

gray 2005

anthracite 2006

brown 2008

garnet 2015

green 2016

cream 2017

blue 2018

camel 2020

clay 2022

ecru granite

cream granite

ice 2101

Self-watering system included in all planters except those with basic finish

Lacquered
Ref. 67022RF

white 3101

black 3102

ecru 3103

tortora 3104

gray 3105

anthracite 3106

garnet 3113

green 3116

cream 3117

blue 3118

brown 3125

Lacquered Polyethylene

lighting

Led – White
Ref. 67022W

ice 2101

White internally lit unit with LED technology. Available only in matte ice white finish.

LED RGBW – Cable
Ref. 67022L

ice 2101

Unit with internal lighting with RGBW LED technology and remote control unit for switching colors. Available only in matte ice white finish. Remote control included.

LED RGBW DMX – Cable
Ref. 67022D

ice 2101

Unit with internal lighting with RGBW LED technology and remote control unit for switching colors. Also controlLED by DMX-1024 (wireless), enabling communication between one or more products simultaneously via the DMX transmitter (not included). There are two options to choose from: Professional XLR DMX and Home WIFI DMX. (Remote control included).
Optional battery

LED RGBW – Battery
Ref. 67022Y

ice 2101

Unit with internal lighting with battery-powered RGBW LED technology. Includes charger and remote control for switching colors and charger. Available only in matte ice white finish.

LED RGBW DMX – Battery
Ref. 67022DY

ice 2101

Unit with internal lighting with RGBW LED technology and remote control unit for switching colors. Also controlLED by DMX-1024 (wireless), enabling communication between one or more products simultaneously via the DMX

transmitter (not included). There are two options to choose from: Professional XLR DMX and Home WIFI DMX. (Remote control included).

plato

Ref. 42752

white 2001	black 2002	ecru 2003	tortora 2004	gray 2005
anthracite 2006	brown 2008	garnet 2015	green 2016	cream 2017
blue 2018	camel 2020	clay 2022	ecru granite	cream granite
ice 2101				

VONDOM

Ambients