ARKETIPO / INDOOR

SOFA BODYGUARD

designed by Studio Bigg 2025

STRUCTURE: Metal

ARM AND BACK UPHOLSTERY: multi-density expanded polyurethane (T40+CD18SS+T30N) covered with resin lining 350gr and wadding “Fibra Piuma 545gr.”

SEAT UPHOLSTERY: multi-density expanded polyurethane (T40+OS35scm+35EM+MindFoam SS) covered with wadding “Fibra Piuma 545gr.”

SPRINGING: elastic belts

SEAT HEIGHT: 44 cm - 49cm with feet h. 22 cm)

ARM HEIGHT: minimum 60 cm; maximum 75 cm - minimum 65cm; maximum 80cm with feet h. 22cm)

FEET: micaceous brown varnished metal h.17cm. On request feet can be supplied 5 cm higher, with an extra charge.

NOTE 1: The arm and backs mechanisms increase the size of the sofa by 15cm in the width and 10 cm in the depth.

NOTE 2: In order to avoid any damages to the mechanism, please do not sit on arms and backs.

central unit

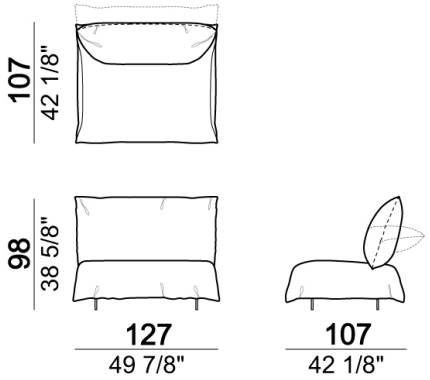

Composition D (left unit 107 cm + 2 central unit 169 cm with angle 45° + right unit 107 cm)

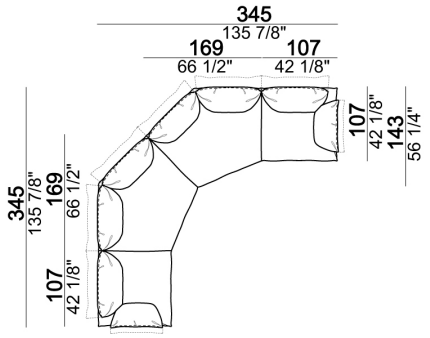

Composition G (left unit 107 cm + corner unit 169 cm + central unit 97 cm + right unit 107 cm)

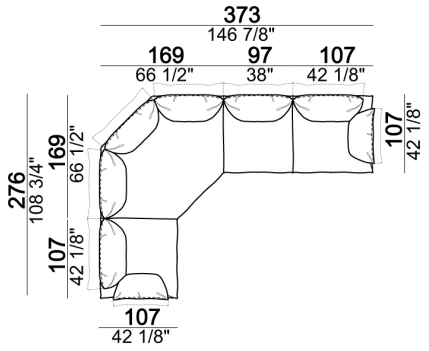

Right or left unit

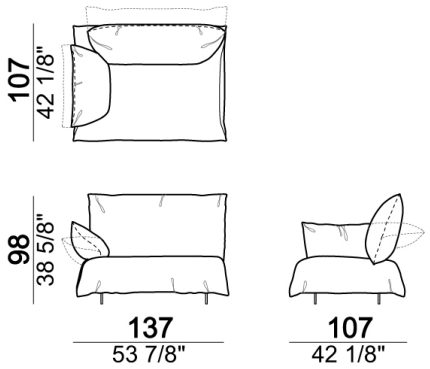

Composition F (central unit 169 cm with angle 45°. + central unit 97 cm + central unit 169 cm with angle 45°)

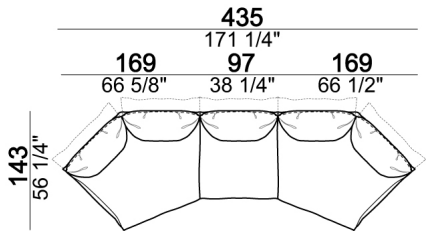

Central unit

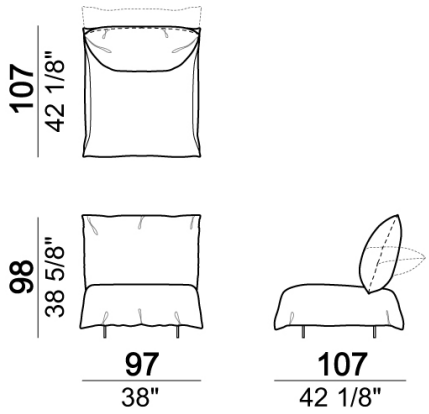

Dormeuse with right or left angle 30°

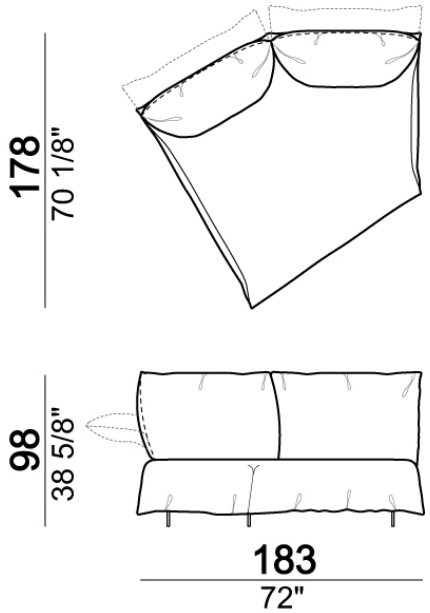

Composition C (left unit 107 cm + corner unit 169 cm + right unit 137 cm)

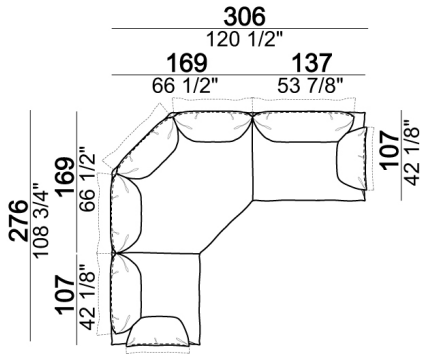

Right or left unit

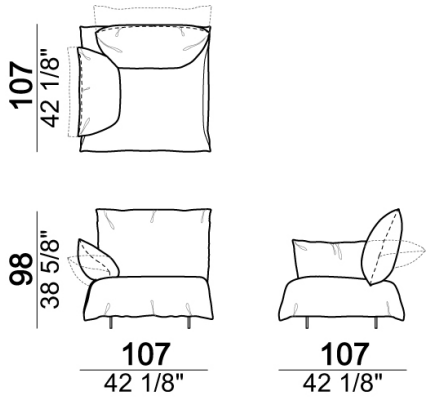

Central unit with angle 45°

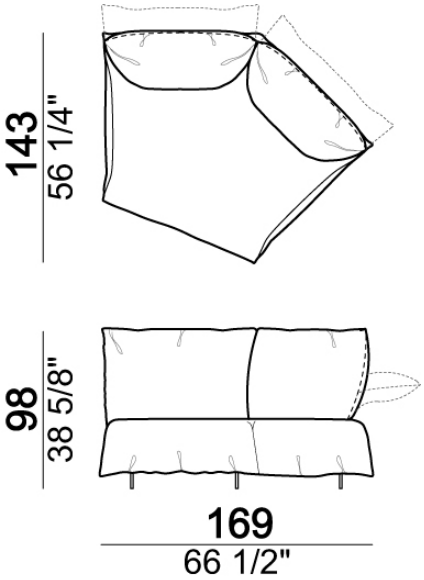

Composition A (left unit 107 cm + central unit 178 cm with angle 30° + right unit 107 cm)

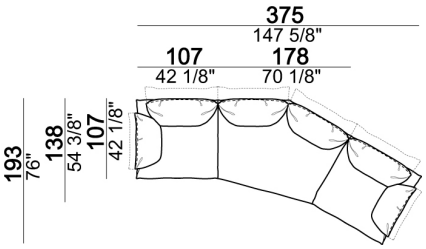

Central unit with angle 30°

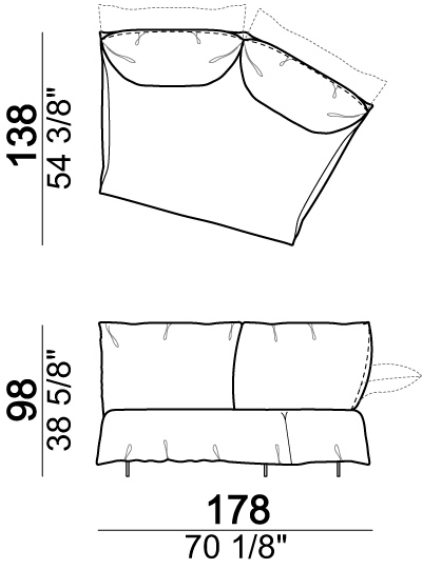

Composition E (dormeuse 183 cm with left angle 30°+ central unit 97 cm + right unit 107 cm)

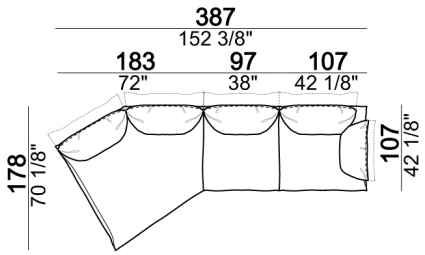

Sofa made by right unit 107 cm + left unit 107 cm

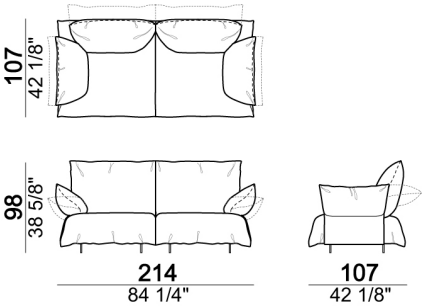

Corner unit

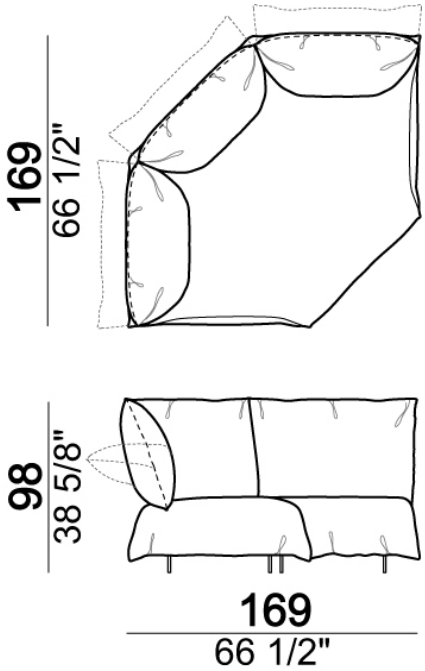

Sofa made by left unit 107 cm + central unit 97 cm + right unit 107 cm

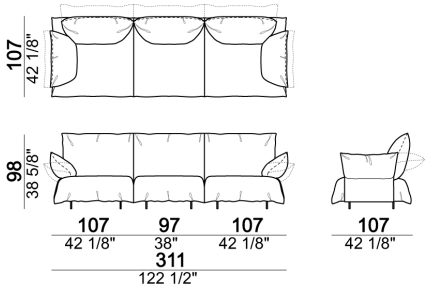
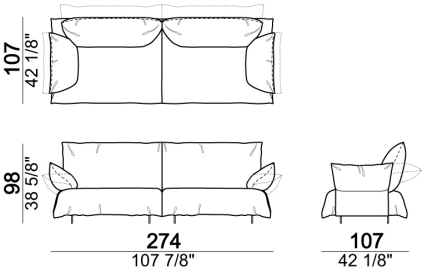
Sofa made by right unit 137 cm + left unit 137 cm