CROSS | S451

Mario Ferrarini | 2022

CROSS

Mario Ferrarini | 2022

One day, at the airport. The idea for this highly elegant stool, designed by Mario Ferrarini, arose in one of the symbolic places of our times. There, where everything is fast, where every little break requires comfort, tranquility and beauty. The CROSS stool has become part of the Lapalma collection, offering a journey between a dynamic appeal and stability, energy and balance. With its attractive and fluid profile, appearing to almost take off, CROSS is what its name promises, a passage, a crossing. The body rests while thoughts remain active.

CROSS

Mario Ferrarini | 2022

| S451 stool h 65

Stool with cantilevered tubular metal frame and powder coated finish. Seat in polyurethane with rigid insert. Anti-tipping metal glides at front in same powder finish. Feet in polythene.

TEST EN 1728:2012 6.4
TEST EN 1728:2012 6.5
TEST EN 1728:2012 6.8
TEST EN 16139:2013 L.2

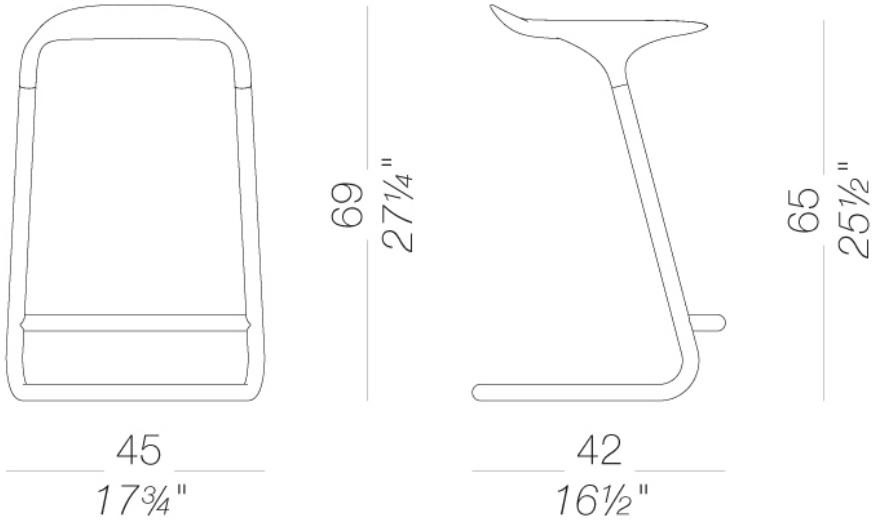

CROSS | S451

Mario Ferrarini | 2022

frame

powder coating pistacchio
1 Colors

powder coating black
1 Colors

powder coating perla
1 Colors

powder coating celeste
1 Colors

powder coating mattone
1 Colors

powder coating oliva
1 Colors

powder coating tortora
1 Colors

seat

plastics polyurethane black
1 Colors

plastics polyurethane perla
1 Colors

plastics polyurethane celeste
1 Colors

plastics polyurethane mattone
1 Colors

plastics polyurethane oliva
1 Colors

plastics polyurethane tortora
1 Colors

plastics polyurethane pistacchio
1 Colors

CROSS | S451

Mario Ferrarini | 2022

consult the porfolio for the range of colors, fabrics, eco-leather, soft-leather.

use and maintenance instructions
Clean all parts in wood, leather, fabric and metal with a damp cloth or a diluted neutral cleaner. Do not use cleaners with alcohol, bleach, solvent or abrasive products. Any liquid spilt on the product must be wiped up immediately.When lifting or moving the product, hold it on the structure and not under the seat. The product should not be subjected to unbalanced weights, as it is designed for a proper rest on the foothold (on four legs or on the base). Our company relieves from any responsibility in case of damage caused to fragile floors. Avoid any improper use of the product: do not step on the product, on the footrest or on the armrests. Avoid any movements that could compromise the proper functionality of the product or the safety of the users.Wood and leather, being natural materials, could be easily damaged. Small impurities or imperfections are within quality standard range.Do not expose the product to weather conditions or atmospheric agents, nor to heat sources over 40°C. Also products for outdoor use could be afflicted by atmospheric agents. The product could undergo possible exterior changes due to particular exposure to heat, humidity and saltiness. An appropriate and frequent maintenance and cleaning of the product enhances its durability. The product could change colour and shade, if exposed to direct sunlight. Maintenance has to be carried out by experienced staff. Dispose of the package only after assembling the product, in order to avoid the loss of ironmongery and components. Once the product has been dismantled, the product itself or its components must be given to the public garbage disposal system, according to the legislation in force.