KIPU ED05 | Large outdoor pouf

Anderssen & Voll | 2014

KIPU

Anderssen & Voll | 2014

In 2014, the duo Arderssen&Voll created for Lapalma a sculptural and casual pouf, ideal also as a coffee table. The shape was inspired by a pebble smoothed by the river. Over a decade, this elegant and versatile pouf, born to freely inhabit lounge spaces, alone or in company, has conquered other spaces, from offices to libraries, from hotels to homes, and everywhere, in the variety of shapes and upholstery, it has transmitted personality and comfort.
Growing up means exactly this, reinventing a form that seemed already perfect. Ten years after its birth, the KIPU pouf has become an armchair, KIPU Club.
In 2024, the Norwegian design studio added an ergonomic backrest to the KIPU seat, which supports, protects, and softly embraces the body. The pebble has become a nest. The many admirers of this furniture, perfect alone and generous in pairs or groups, have become a club. Registrations are open. Dress code? Elegance, joy, relaxation.

KIPU

Anderssen & Voll | 2014

ED05 | Large outdoor pouf 130x130 H45

Pouf with moulded polyurethane foam double density and polyester fiber, all fire-retardant, with protective water-resistant and breathable fabric layer and finished with UV stable outdoor fabric. Base in marine plywood with glides in polypropylene. Water-resistant protective covers are available.

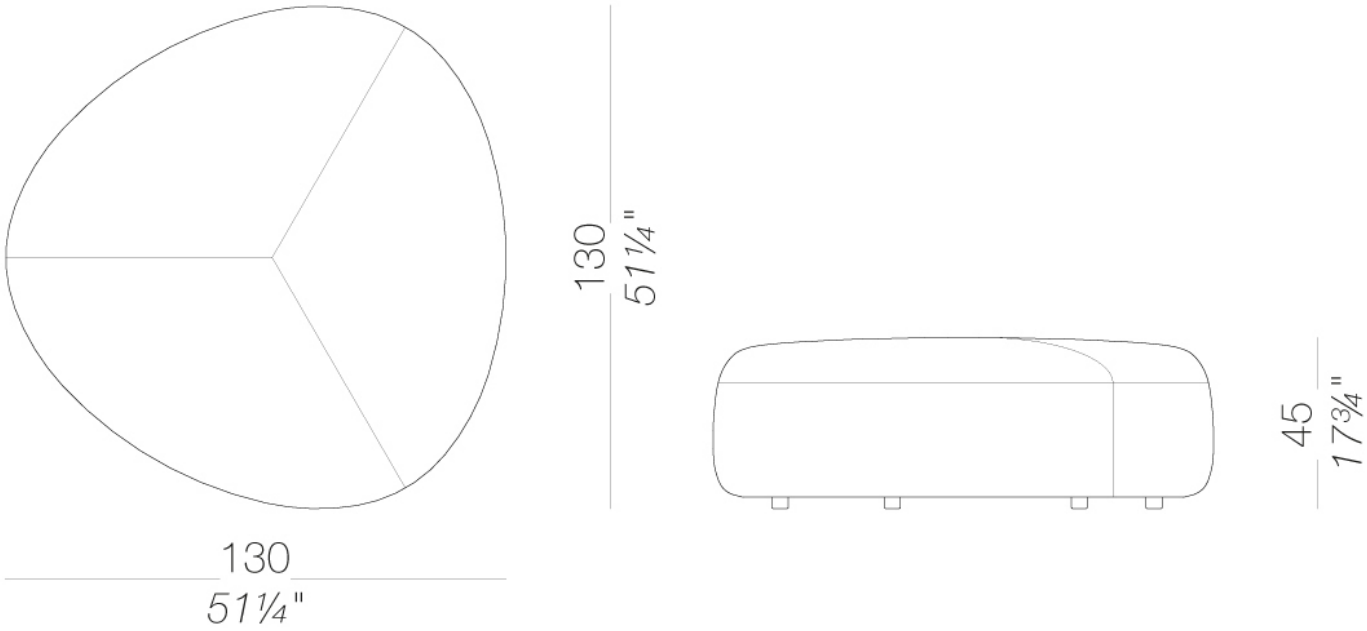

KIPU ED05 | Large outdoor pouf

Anderssen & Voll | 2014

upholstery

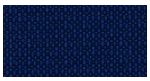

fabric
Iris - Grade B
34 Colors

fabric
Atrium - Grade. C
16 Colors

fabric
Panama - Grade. A
48 Colors

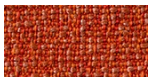

fabric
Sorrento - Grade. B
22 Colors

KIPU ED05 | Large outdoor pouf

Anderssen & Voll | 2014

consult the folder of materials for the range of colors and fabrics

use and maintenance instructions
Outdoor fabrics are lined unglued, therefore any creasing in the upholstery is an inevitable consequence of use and cannot be considered grounds for any claims. To prolong the life of the product, clean the surfaces regularly, dry them with a clean cloth and remove any stagnant water, especially if exposed in locations with a high level of humidity or a marine climate.
When not in use, we recommend storing in sheltered places and covering with waterproof protection. In this case, it is advisable to remove the cover and ventilate the product frequently and regularly to avoid the onset of any mould or stains due to damp.
THE WARRANTY WILL NOT COVER DEFECTS OR IMPERFECTIONS RESULTING FROM THE PASSAGE OF TIME OR TO WEAR AND TEAR DUE TO THE NORMAL USE OF THE PRODUCT.