The factory lamp s

by Ramón Esteve

The Factory collection, designed by Ramón Esteve for Vondom, epitomizes the intersection of cutting-edge design and enduring functionality. Ramón Esteve's meticulous attention to detail is evident in the aluminum profiles and the "deployé" weave technique, setting a new standard for luxury outdoor furniture.
This collection includes a modular sofa, armchair, lounger, side table, lamp, coffee table, high table, chairs and room divider, each piece crafted in Europe to enhance outdoor spaces with elegance and comfort.

Info

Description

Designer lamp. The deployed mesh is made from aluminum, and the inner lighting is made out of polyethylene resin manufactured by rotational molding. Suitable for an interior and an outdoor use. Available in various finishes.

Weight: 3.99 Kg

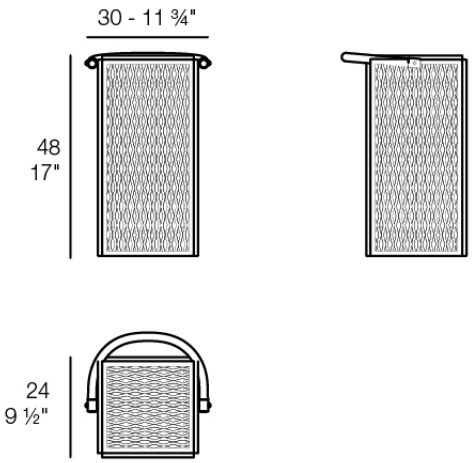

THE FACTORY Lámpara 30 x 24 x 48
THE FACTORY Puff S 11¾ x 9½ x 19"

VONDOM

Finishes

lighting

LED RGBW – Battery
Ref. 54612Y

white
gray
anthracite
black
cream
ecru
tortora
garnet
brown
smoked
green
blue

Unit with internal lighting with battery-powered RGBW LED technology. Includes charger and remote control for switching colors and charger. Available only in matte ice white finish.

LED RGBW DMX – Battery
Ref. 54612DY

white
gray
anthracite
black
cream

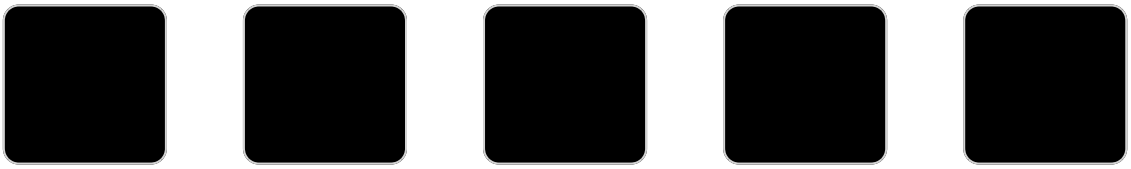

ecru tortora garnet brown smoked

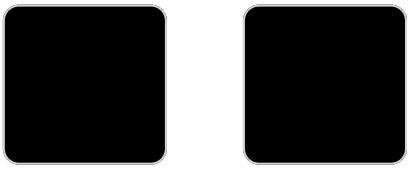

green blue

Unit with internal lighting with RGBW LED technology and remote control unit for switching colors. Also controlLED by DMX-1024 (wireless), enabling communication between one or more products simultaneously via the DMX transmitter (not included). There are two options to choose from: Professional XLR DMX and Home WIFI DMX. (Remote control included).

VONDOM

Ambients