ADD T

Francesco Rota | 2016

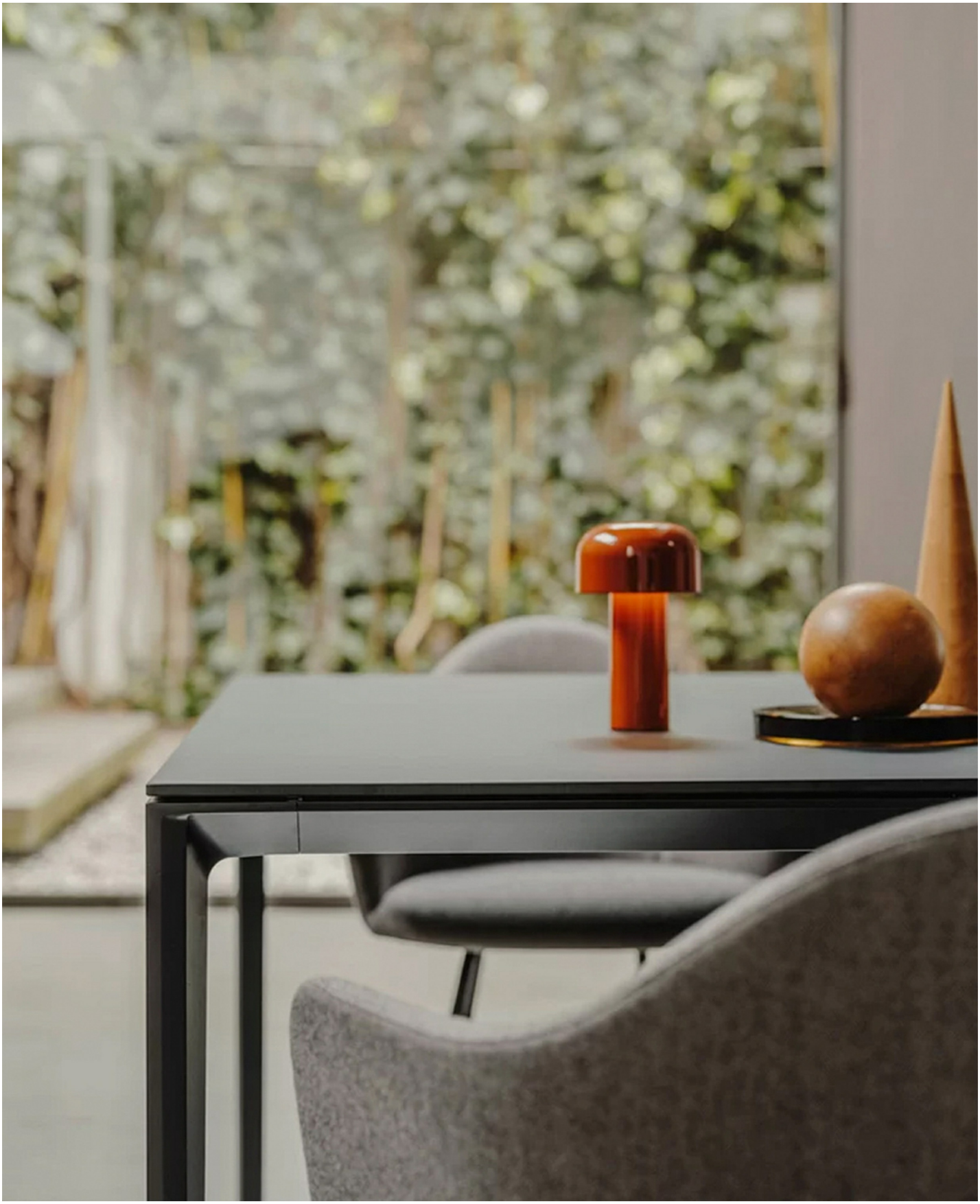

ADD T

Francesco Rota | 2016

To write, to read, and when the community expands, to work and meet. Minimal as an infinitive verb, the ADD T table caters to the needs of any environment - from the office to dining to private spaces. With a light touch and extreme character, the table shines with its own life and seamlessly complements the ADD seating system. Thanks to the aluminum cast legs that continue to connect the frames, the compositions multiply, enriched by the tabletop finishes - white fenix, black fenix, oak, and open-pore black. Hidden and anchored beneath the surface, the cables flow. On the tabletop, sockets and power supplies for smart workstations. In the air, the serenity of a day where everything is easy.

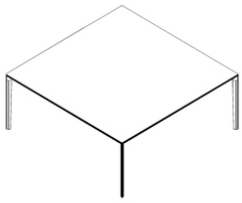

Square

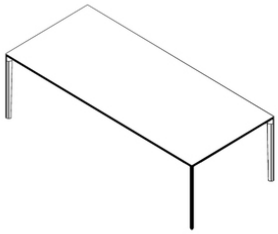

Rectangle

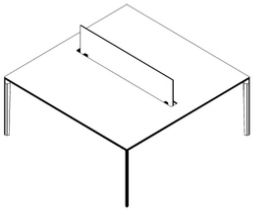

Privacy screen

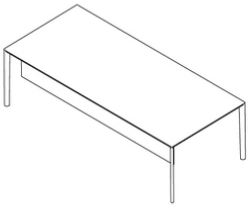

Modesty screen

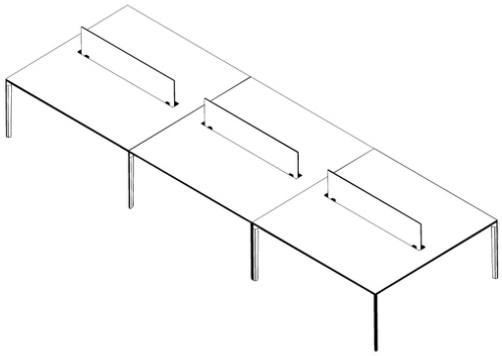

Linked

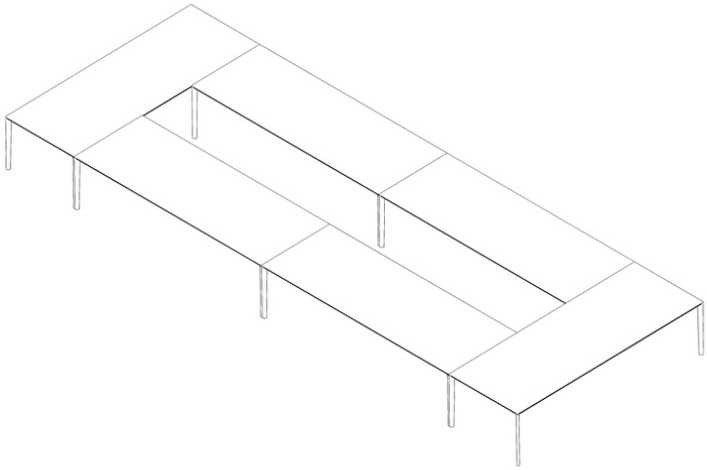

Rectangular conference

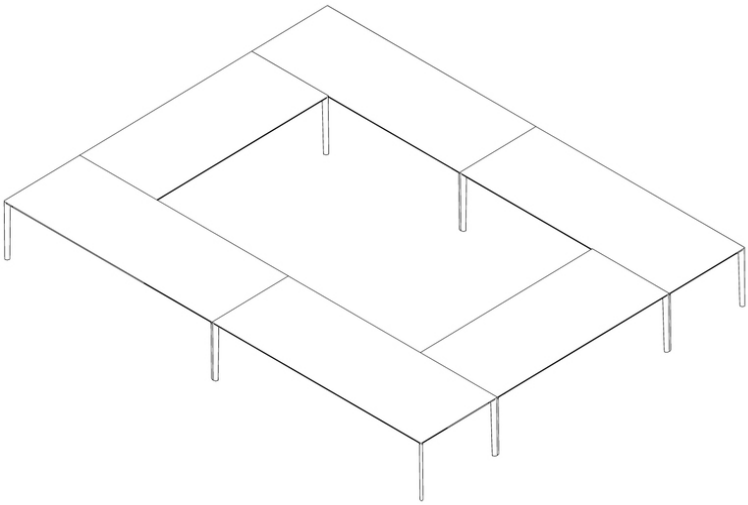

Square conference

ADD T

Francesco Rota | 2016

Modular system of tables with frame in aluminium extrusion and die-cast aluminium corner and linking legs, all powder coated, which allows several configurations. Tops available in HPL Fenix® 10 mm or veneered in wood in several finishes.

legs

tops

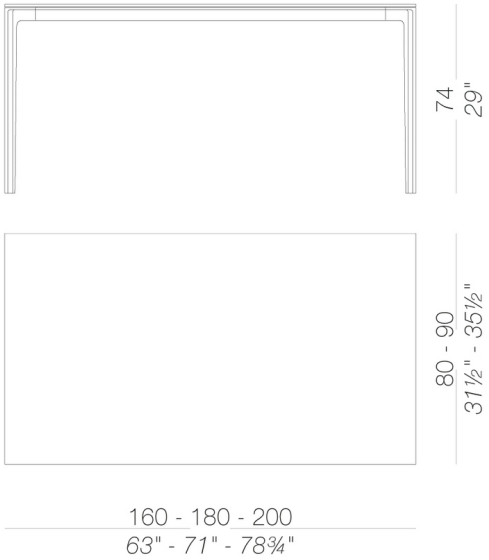

ADD T

Francesco Rota | 2016

modesty panel

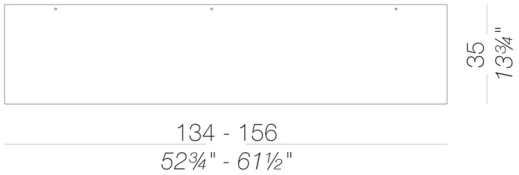

desk with partition panel and metal tray for cabling

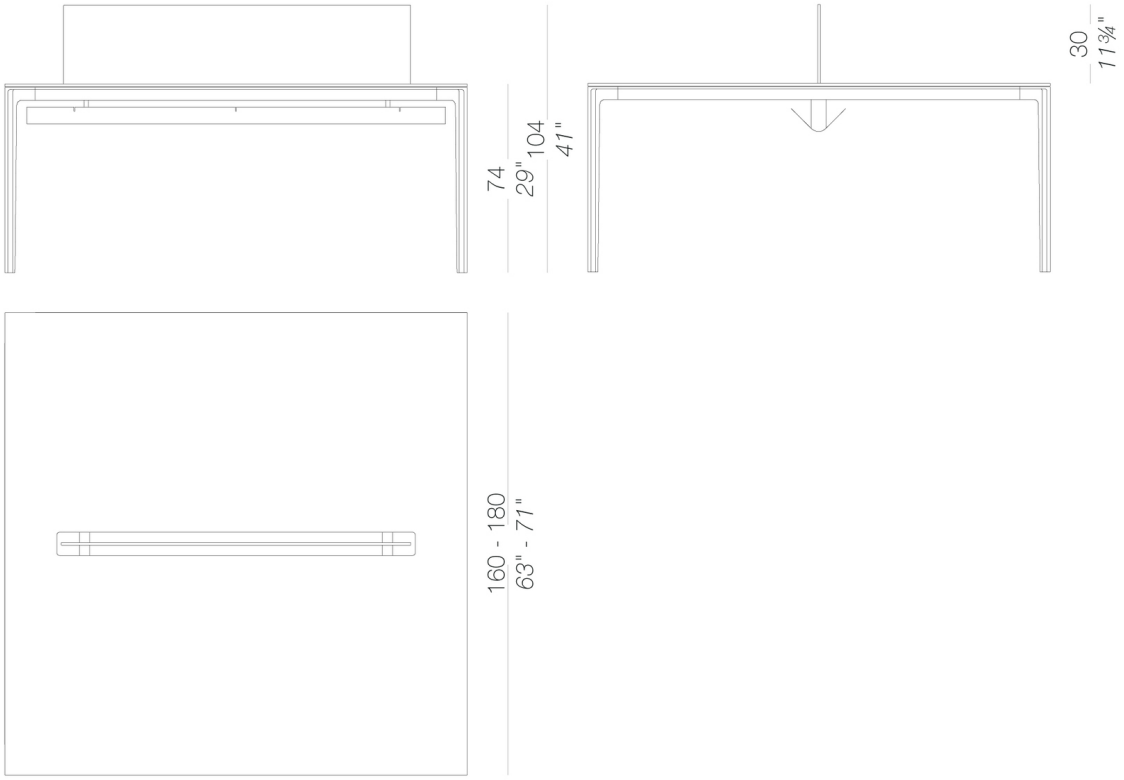

partition panel

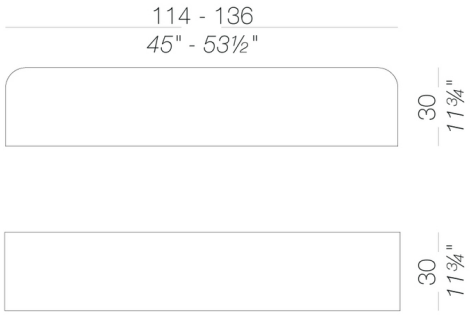

ADD T

Francesco Rota | 2016

frame

powder coating
black
1 Colors

powder coating
white
1 Colors

powder coating
white
1 Colors

top

HPL 10 mm
white HPL fenix
1 Colors

HPL 10 mm
black HPL fenix
1 Colors

HPL 10 mm
HPL fenix grigio
Londra
1 Colors

HPL 10 mm
HPL fenix rosso
Jaipur
1 Colors

HPL 10 mm
HPL fenix comodoro
1 Colors

wood
blanched oak
1 Colors

wood
black open pore
1 Colors

modesty panel

HPL 10 mm
black HPL fenix
1 Colors

HPL 10 mm
white HPL fenix
1 Colors

HPL 10 mm
HPL fenix grigio
Londra
1 Colors

HPL 10 mm
HPL fenix rosso
Jaipur
1 Colors

partition panel

fabric
Hallingdal 65 - Grade C
58 Colors

fabric
Canvas 2 - Grade C
45 Colors

fabric
Steelcut Trio 3 - Grade D
54 Colors

fabric
Remix 3 - Grade C
72 Colors

fabric
Fiord 2 - Grade C
39 Colors

fabric
Divina MD - Grade D
27 Colors

fabric
Divina Melange 3 - Grade D
38 Colors

fabric
Tonica 2 - Grade C
39 Colors

fabric
Medley - Grade A
37 Colors

fabric
Jet - Grade A
66 Colors

fabric
Maya - Grade A
43 Colors

fabric
Capture - Grade B
60 Colors

fabric
Crisp - Grade B
40 Colors

fabric
Iris - Grade B
34 Colors

fabric
Steelcut 3 - Grade D
40 Colors

fabric
Grain - Grade. B
50 Colors

fabric
Re-wool - Grade C
24 Colors

consult the porfolio for the range of colors, fabrics, eco-leather, soft-leather.

use and maintenance instructions
Clean all parts in wood, leather, fabric and metal with a damp cloth or a diluted neutral cleaner. Do not use cleaners with alcohol, bleach, solvent or abrasive products. Any liquid spilt on the product must be wiped up immediately.When lifting or moving the product, hold it on the structure and not under the seat. The product should not be subjected to unbalanced weights, as it is designed for a proper rest on the foothold (on four legs or on the base). Our company relieves from any responsibility in case of damage caused to fragile floors. Avoid any improper use of the product: do not step on the product, on the footrest or on the armrests. Avoid any movements that could compromise the proper functionality of the product or the safety of the users.Wood and leather, being natural materials, could be easily damaged. Small impurities or imperfections are within quality standard range.Do not expose the product to weather conditions or atmospheric agents, nor to heat sources over 40°C. Also products for outdoor use could

be afflicted by atmospheric agents. The product could undergo possible exterior changes due to particular exposure to heat, humidity and saltiness. An appropriate and frequent maintenance and cleaning of the product enhances its durability. The product could change colour and shade, if exposed to direct sunlight. Maintenance has to be carried out by experienced staff. Dispose of the package only after assembling the product, in order to avoid the loss of ironmongery and components. Once the product has been dismantled, the product itself or its components must be given to the public garbage disposal system, according to the legislation in force.