Noma stool

by Javier Mariscal

The Noma Collection**,** designed by **Javier Mariscal** for the Spanish brand **Vondom**, is a group of outdoor items. The idea behind NOMA was to create a new type of furniture by blending the functions of a planter and an outdoor table. The result is a **collection that is distinctive and versatile in nature**.

VONDOM

Info

Description

Made of polyethylene resin by rotational moulding. 100% Recyclable. Item suitable for indoor and outdoor use. Available in different finishes.

Weight: 5.5 Kg

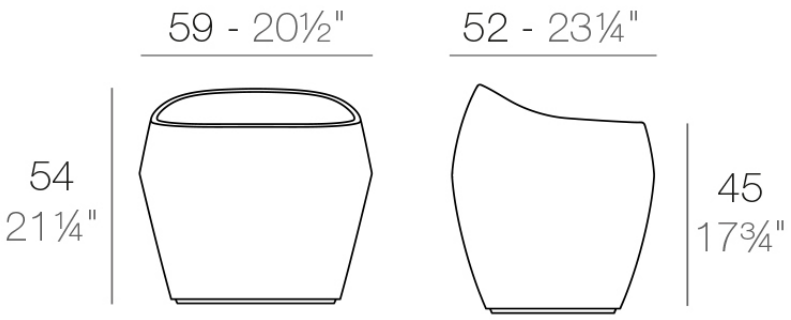

NOMA Taburete Bajo
NOMA Low Stool

Finishes

finishes

Basic
Ref. 45059A

Matt Polyethylene

Lacquered
Ref. 45059F

VONDOM

white 3101

black 3102

ecru 3103

tortora 3104

gray 3105

anthracite 3106

garnet 3113

green 3116

cream 3117

blue 3118

brown 3125

Lacquered Polyethylene

lighting

Led – White
Ref. 45059W

ice 2101

White internally lit unit with LED technology. Available only in matte ice white finish.

LED RGBW – Cable
Ref. 45059L

ice 2101

Unit with internal lighting with RGBW LED technology and remote control unit for switching colors. Available only in matte ice white finish. Remote control included.

LED RGBW DMX – Cable
Ref. 45059D

ice 2101

Unit with internal lighting with RGBW LED technology and remote control unit for switching colors. Also controlLED by DMX-1024 (wireless), enabling communication between one or more products simultaneously via the DMX transmitter (not included). There are two options to choose from: Professional XLR DMX and Home WIFI DMX. (Remote control included).
Optional battery

LED RGBW – Battery
Ref. 45059Y

ice 2101

Unit with internal lighting with battery-powered RGBW LED technology. Includes charger and remote control for switching colors and charger. Available only in matte ice white finish.
LED RGBW DMX – Battery

Ref. 45059DY

ice 2101

Unit with internal lighting with RGBW LED technology and remote control unit for switching colors. Also controlLED by DMX-1024 (wireless), enabling communication between one or more products simultaneously via the DMX transmitter (not included). There are two options to choose from: Professional XLR DMX and Home WIFI DMX. (Remote control included).

Ambients