Noma planter medium

by Javier Mariscal

The Noma Collection**,** designed by **Javier Mariscal** for the Spanish brand **Vondom**, is a group of outdoor items. The idea behind NOMA was to create a new type of furniture by blending the functions of a planter and an outdoor table. The result is a **collection that is distinctive and versatile in nature**.

VONDOM

Info

Description

Pot made of polyethylene resin by rotational moulding. 100% Recyclable. Item suitable for indoor and outdoor use. Available in different finishes.

Weight: 11 Kg

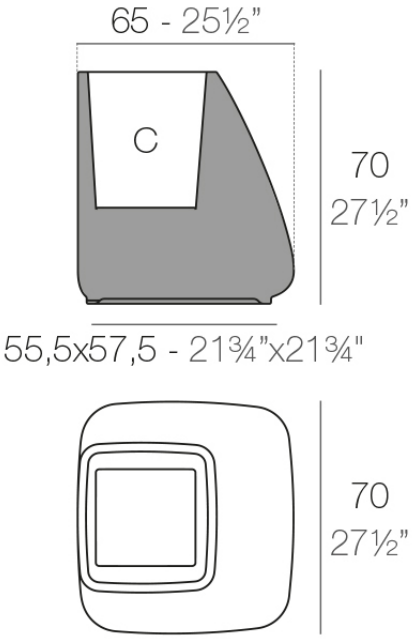

Macetero Medium
Medium Planter

C = 48 L
C = 12¾ gal

Finishes

finishes

Basic
Ref. 45004A

Matt Polyethylene

Self-Watering
Ref. 45004R

VONDOM

white 2001 | black 2002 | ecru 2003 | tortora 2004 | gray 2005

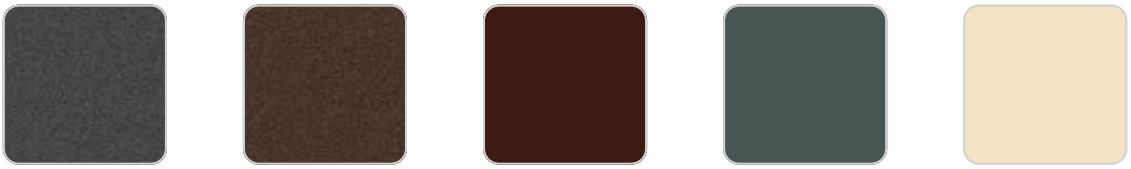

anthracite 2006 | brown 2008 | garnet 2015 | green 2016 | cream 2017

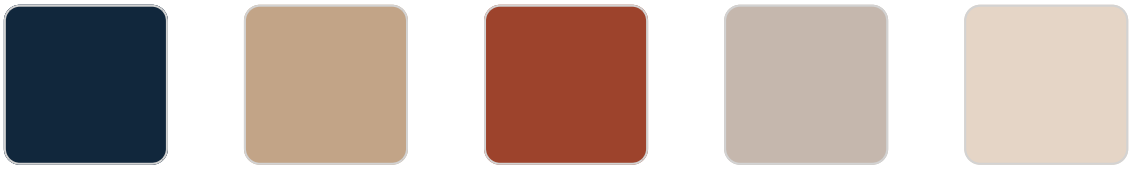

blue 2018 | camel 2020 | clay 2022 | ecru granite | cream granite

ice 2101

Self-watering system included in all planters except those with basic finish

Lacquered
Ref. 45004F

white 3101 | black 3102 | ecru 3103 | tortora 3104 | gray 3105

anthracite 3106 | garnet 3113 | green 3116 | cream 3117 | blue 3118

brown 3125

Lacquered Polyethylene

lighting

Led – White
Ref. 45004W

ice 2101

White internally lit unit with LED technology. Available only in matte ice white finish.

LED RGBW – Cable
Ref. 45004L

ice 2101

Unit with internal lighting with RGBW LED technology and remote control unit for switching colors. Available only in matte ice white finish. Remote control included.

LED RGBW DMX – Cable
Ref. 45004D

ice 2101

Unit with internal lighting with RGBW LED technology and remote control unit for switching colors. Also controlLED by DMX-1024 (wireless), enabling communication between one or more products simultaneously via the DMX transmitter (not included). There are two options to choose from: Professional XLR DMX and Home WIFI DMX. (Remote control included).
Optional battery

LED RGBW – Battery
Ref. 45004Y

ice 2101

Unit with internal lighting with battery-powered RGBW LED technology. Includes charger and remote control for switching colors and charger. Available only in matte ice white finish.

LED RGBW DMX – Battery
Ref. 45004DY

ice 2101

Unit with internal lighting with RGBW LED technology and remote control unit for switching colors. Also controlLED by DMX-1024 (wireless), enabling communication between one or more products simultaneously via the DMX

transmitter (not included). There are two options to choose from: Professional XLR DMX and Home WIFI DMX. (Remote control included).

plato

Ref. 42971

white 2001	black 2002	ecru 2003	tortora 2004	gray 2005
anthracite 2006	brown 2008	garnet 2015	green 2016	cream 2017
blue 2018	camel 2020	clay 2022	ecru granite	cream granite
ice 2101				

Ambients