Solid lounge chair

by Stefano Giovannoni

Solid modern outdoor furniture collection, designed by Stefano Giovannoni for Vondom. This collection of items is characterized by its ability to **provide stability despite their lightweight construction**, achieved through their geometric and well-defined cuts that give the impression of being sculpted from stone.

Info

Description

Made of injected polypropylene with mineral additives. Stackable. Available in several colors. Item suitable for indoor and outdoor use.

Weight: 13.5 Kg

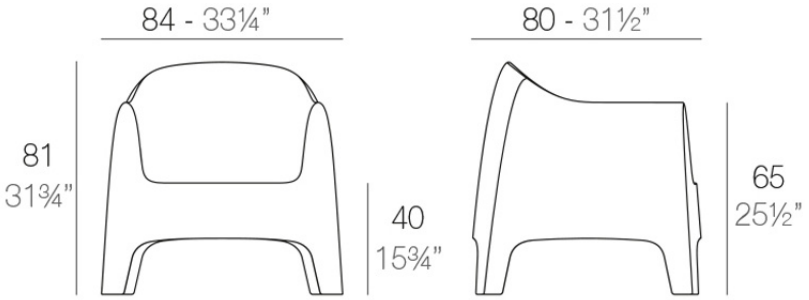

SOLID Lounge Chair
SOLID Butaca

Finishes

finishes

Basic
Ref. 55023

white

black

ecru

Available in various colors

fabric

BAIONA
Ref. 55023CO

ocean 10111 baiona

tortora 10102 baiona

gray 10113 baiona

camel 10104 baiona

ecru 10101 baiona

blue 10112 baiona

cream 10103 baiona

green 10110 baiona

white 10100 baiona

jade 10109 baiona

brown 10108 baiona | garnet 10107 baiona | black 10114 baiona | clay 10106 baiona

Group 1C. High density 100% acrylic fabric, which provides a solid feel. It has an irregular pattern that adds a handcrafted touch.

CALELLA
Ref. 55023CO

jade 10126 calella

mustard 10124 calella

clay 10125 calella

cream 10123 calella

tortora 10122 calella

anthracite 10129 calella

ecru 10121 calella

gray 10128 calella

white 10120 calella

blue 10127 calella

Group 1C. PFAS-free 100% acrylic fabric with a rich and unusual texture and an exceptional sofness, which enhances the comfort of the furniture.

FISTERRA
Ref. 55023CO

cream 10132 fisterra

white 10130 fisterra

ecru 10131 fisterra

tortora 10135 fisterra

camel 10134 fisterra

peach 10146 fisterra

clay 10137 fisterra

brown 10136 fisterra

olive 10145 fisterra

jade 10139 fisterra

green 10140 fisterra

ocean 10141 fisterra

blue 10142 fisterra

gray 10143 fisterra

anthracite 10144 fisterra

black 10147 fisterra

Group 1C. 100% acrylic fabric, with a distintive irregular marbled pattern and a soft feel.

PORTONOVO
Ref. 55023CO

blue 10162 portonovo

camel 10154 portonovo

green 10160 portonovo

tortora 10152 portonovo

ocean 10161 portonovo

cream 10153 portonovo

jade 10159 portonovo

ecru 10151 portonovo

brown 10158 portonovo

white 10150 portonovo

black 10165 portonovo

garnet 10157 portonovo

anthracite 10164 portonovo

clay 10156 portonovo

mustard 10155 portonovo

gray 10163 portonovo

Group 1A. 100% acrylic fabric, with a flat and simple design, which adapts to any decorative style.

ALTEA
Ref. 55023CO

tortora 1102 altea

white 1100 altea

camel 1120 altea

clay 1122 altea

garnet 1106 altea

brown 1104 altea

jade 1125 altea

ocean 1123 altea

gray 1101 altea

anthracite 1124 altea

black 1105 altea

Group 1A. Soft outdoor fabric with leather-like texture.

AROUSA
Ref. 55023CO

tortora 1209 arousa

camel 1230 arousa

clay 1231 arousa

brown 1214 arousa

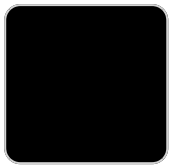
jade 1235 arousa

gray 1208 arousa

anthracite 1210 arousa

Group 1B. Soft outdoor fabric with shiny finish.

Ambients