10:30 | ED162

Anderssen & Voll | 2024

10:30

Anderssen & Voll | 2024

Time tells the story of a day and a place to spend moments of sheer relaxation. 10:30 is a coffee break, a meeting and, in the evening, a film while comfortably lounging. 10:30 is the new sofa by Anderssen & Voll, created in the agile and essential style that is the hallmark of the Norwegian duo. With its architectural personality, 10:30 combines geometric contours, comfort and lightness, minimising materials and the overall dimensions of volumes, therefore enhancing versatility, environmental friendliness and sustainability. On the solid ash base, or Iroko for outdoor environments, rest two soft upholstered cushions. Comfortable and embracing, they bring the bold yet understated character of Lapalma's contemporary style to company lounges, waiting rooms and home interiors. Available as an armchair, a 2-seater sofa and an extended 2-seater sofa, in a wide selection of upholstery, 10:30, in the morning or in the evening, means at least twelve hours of elegance and rest.

10:30

Anderssen & Voll | 2024

| ED162 outdoor two-seater sofa

2-seater sofa with transparently painted solid iroko wood frame. Felt feet. Removable polyurethane foam seat and back cover in differentiated density with laminated polyester fiber, fire retardant, covered with breathable and waterproof protective fabric and UV-resistant outer fabric. Waterproof protective covers available.

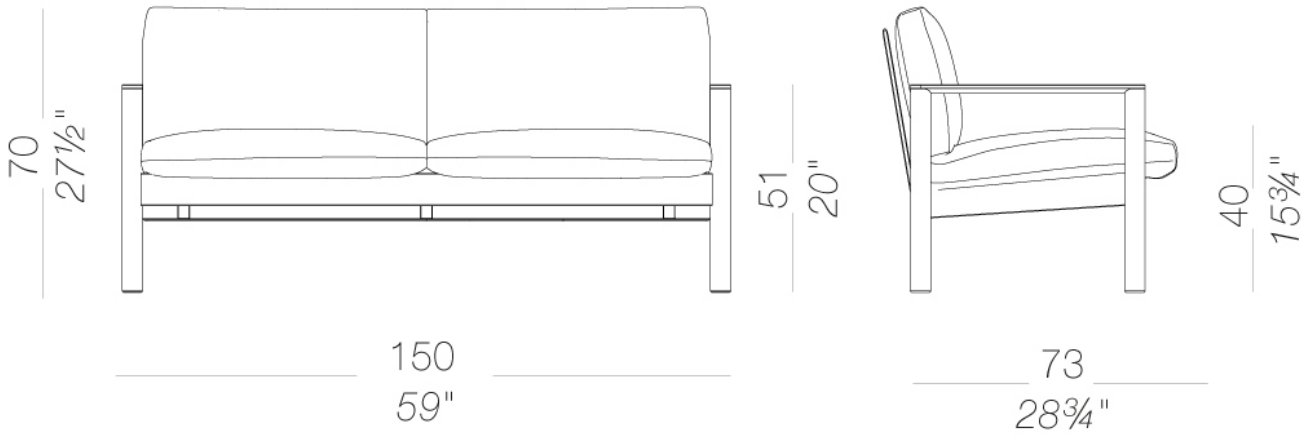

10:30 | ED162

Anderssen & Voll | 2024

frame

wood
iroko
1 Colors

upholstery

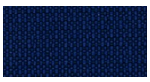

fabric
IIris - Grade B
34 Colors

fabric
Atrium - Grade. C
16 Colors

fabric
Panama - Grade. A
48 Colors

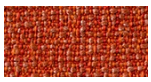

fabric
Sorrento - Grade. B
22 Colors

10:30 | ED162

Anderssen & Voll | 2024

consult the porfolio for the range of colors, fabrics, eco-leather, soft-leather.

use and maintenance instructions
Clean all parts in wood, leather, fabric and metal with a damp cloth or a diluted neutral cleaner. Do not use cleaners with alcohol, bleach, solvent or abrasive products. Any liquid spilt on the product must be wiped up immediately.When lifting or moving the product, hold it on the structure and not under the seat. The product should not be subjected to unbalanced weights, as it is designed for a proper rest on the foothold (on four legs or on the base). Our company relieves from any responsibility in case of damage caused to fragile floors. Avoid any improper use of the product: do not step on the product, on the footrest or on the armrests. Avoid any movements that could compromise the proper functionality of the product or the safety of the users.Wood and leather, being natural materials, could be easily damaged. Small impurities or imperfections are within quality standard range.Do not expose the product to weather conditions or atmospheric agents, nor to heat sources over 40°C. Also products for outdoor use could be afflicted by atmospheric agents. The product could undergo possible exterior changes due to particular exposure to heat, humidity and saltiness. An appropriate and frequent maintenance and cleaning of the product enhances its durability. The product could change colour and shade, if exposed to direct sunlight. Maintenance has to be carried out by experienced staff. Dispose of the package only after assembling the product, in order to avoid the loss of ironmongery and components. Once the product has been dismantled, the product itself or its components must be given to the public garbage disposal system, according to the legislation in force.