BONALDO

Basket

Designer: Mauro Lipparini

The Basket unique bed headboard has been designed by calibrating large shapes with soft, enveloping lines. This double bed is covered in fabric, leather or eco-leather, completely removable.
There are many variations to the design: in addition to Basket, there is the Basket plus model, featuring sophisticated tucks on the headboard.
The Basket, and Basket plus are also made in the “open” version: the practical unit provides valuable additional space for storing covers, cushions and everything necessary for the bedroom.

Data sheet

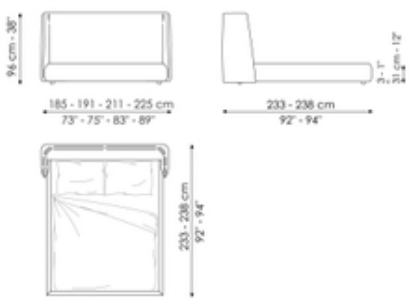

Basket

Width: 185 - 191 - 211 - 225cm

Depth: 233 - 238cm

Height: 96cm

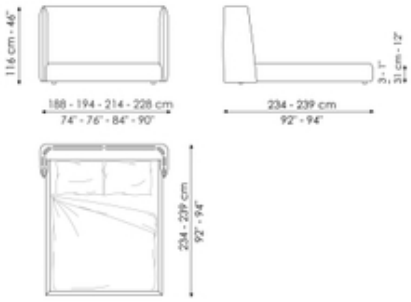

Basket hi

Width: 188 - 194 - 214 - 228cm

Depth: 234 - 239cm

Height: 116cm

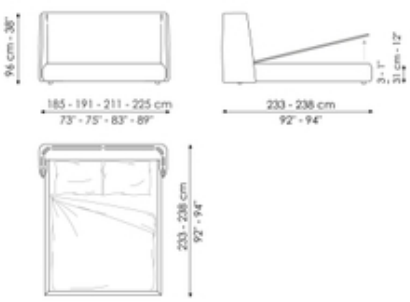

Basket open

Width: 186 - 192 - 212 - 226cm

Depth: 233 - 238cm

Height: 96cm

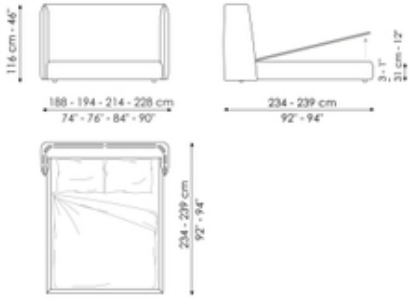

Basket hi open

Width: 188 - 194 - 214 - 228cm

Depth: 234 - 239cm

Height: 116cm

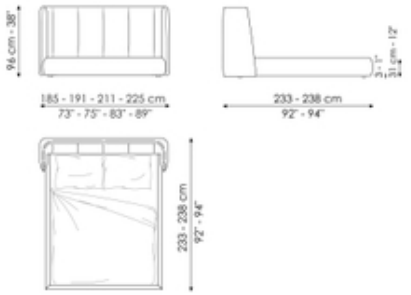

Basket plus

Width: 185 - 191 - 211 - 225cm

Depth: 233 - 238cm

Height: 96cm

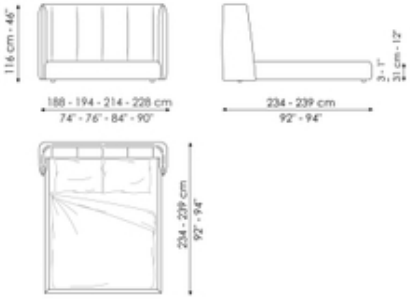

Basket hi plus

Width: 188 - 194 - 214 - 228cm

Depth: 234 - 239cm

Height: 116cm

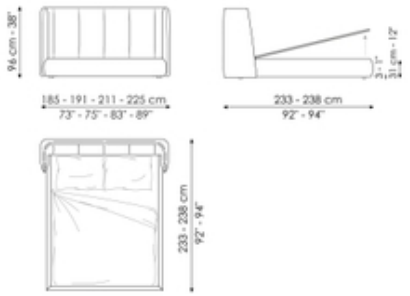

Basket plus open

Width: 186 - 192 - 212 - 226cm

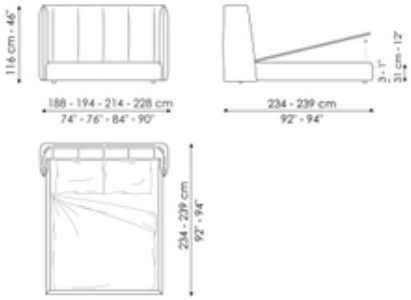

Basket hi plus open

Width: 188 - 194 - 214 - 228cm

Depth: 233 - 238cm
Height: 96cm

Depth: 234 - 239cm
Height: 116cm

Finishes

Feet

Painted wood

Anthracite grey

Materials, fabrics, leathers, colors and finishes are approximate and may slightly differ from actual ones. You can find the complete collection of Bonaldo fabrics and leathers on the website https://bonaldo.biz