Uve 120x40x80

Studio Vondom's extensive collection of indoor and outdoor planters offers timeless and minimalist designs that can help create unique and original atmospheres in homes, restaurants, and any other space.

VONDOM

Info

Description

Pot made of polyethylene resin by rotational moulding. 100% Recyclable. Item suitable for indoor and outdoor use. Available in different finishes.

Weight: 16 Kg

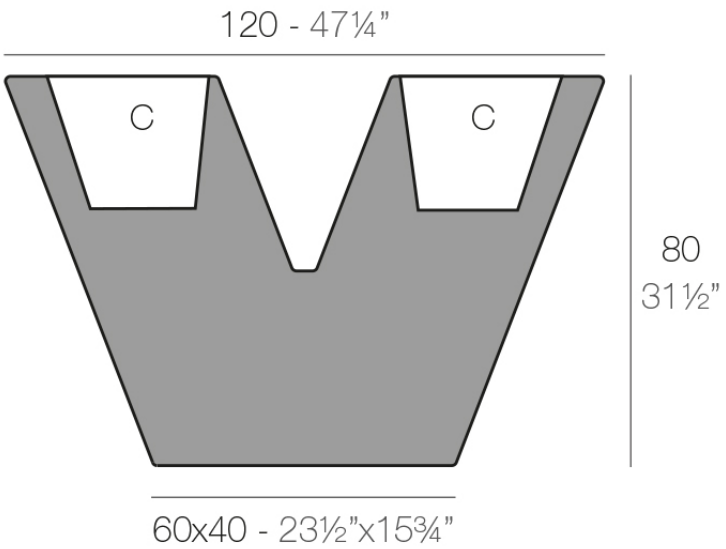

UVE 120 x 40 x 80 cm
UVE 47¼” x 15¾” x 31½”

C = 20 + 20 L
C = 5½ + 5½ gal

Finishes

finishes

Basic
Ref. 43340A

white 2001

black 2002

ecru 2003

tortora 2004

gray 2005

anthracite 2006

brown 2008

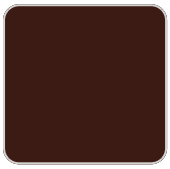
garnet 2015

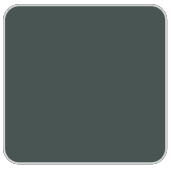
green 2016

cream 2017

blue 2018

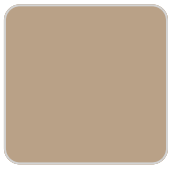
camel 2020

clay 2022

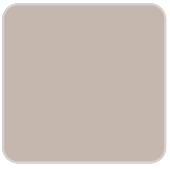
ecru granite

cream granite

ice 2101

Matt Polyethylene

Self-Watering
Ref. 43340R

VONDOM

white 2001
black 2002
ecru 2003
tortora 2004
gray 2005
anthracite 2006
brown 2008
garnet 2015
green 2016
cream 2017
blue 2018
camel 2020
clay 2022
ecru granite
cream granite
ice 2101

Self-watering system included in all planters except those with basic finish

Lacquered
Ref. 43340RF

white 3101
black 3102
ecru 3103
tortora 3104
gray 3105
anthracite 3106
garnet 3113
green 3116
cream 3117
blue 3118

brown 3125

Lacquered Polyethylene

lighting

Led – White
Ref. 43340W

ice 2101

White internally lit unit with LED technology. Available only in matte ice white finish.

LED RGBW – Cable
Ref. 43340L

ice 2101

Unit with internal lighting with RGBW LED technology and remote control unit for switching colors. Available only in matte ice white finish. Remote control included.

LED RGBW DMX – Cable
Ref. 43340D

ice 2101

Unit with internal lighting with RGBW LED technology and remote control unit for switching colors. Also controlLED by DMX-1024 (wireless), enabling communication between one or more products simultaneously via the DMX transmitter (not included). There are two options to choose from: Professional XLR DMX and Home WIFI DMX. (Remote control included).
Optional battery

LED RGBW – Battery
Ref. 43340Y

ice 2101

Unit with internal lighting with battery-powered RGBW LED technology. Includes charger and remote control for switching colors and charger. Available only in matte ice white finish.

LED RGBW DMX – Battery
Ref. 43340DY

ice 2101

Unit with internal lighting with RGBW LED technology and remote control unit for switching colors. Also controlLED by DMX-1024 (wireless), enabling communication between one or more products simultaneously via the DMX

transmitter (not included). There are two options to choose from: Professional XLR DMX and Home WIFI DMX. (Remote control included).
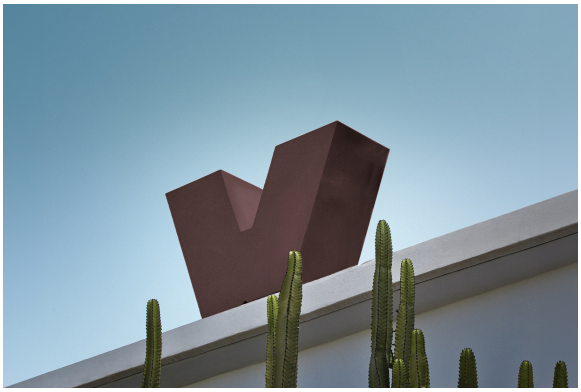
Ambients