JEY | P383

Francesco Rota | 2016

JEY

Francesco Rota | 2016

It has become a family. Stable and dynamic. This is the JEY collection of side tables in various geometric shapes, which is now enriched with two new heights and countless combination options. In essential colours, black and white, in materials that highlight its ancient yet contemporary character, marble and concrete, JEY now extends to 74 cm high with a 70 cm diameter top, continuing up to 105 cm high with a 60 cm shaped top. Alongside, the 'classic' versions with a curved tubular frame, also for the elegant handle, which make this small table-sculpture - available in a top and a portable version - an indispensable addition to enhance the comfort of any table, armchair and sofa. And, of course, another JEY.
Product selected for the Quick Ship program, download the PDF

JEY

Francesco Rota | 2016

| P383 High table H105 with marble base

Occasional table with white Carrara marble base or black Marquinia or in concrete. Stem in powder coated steel. Felt under the base. Top in black or white HPL Fenix® 10 mm, bleached oak or black open-pore.

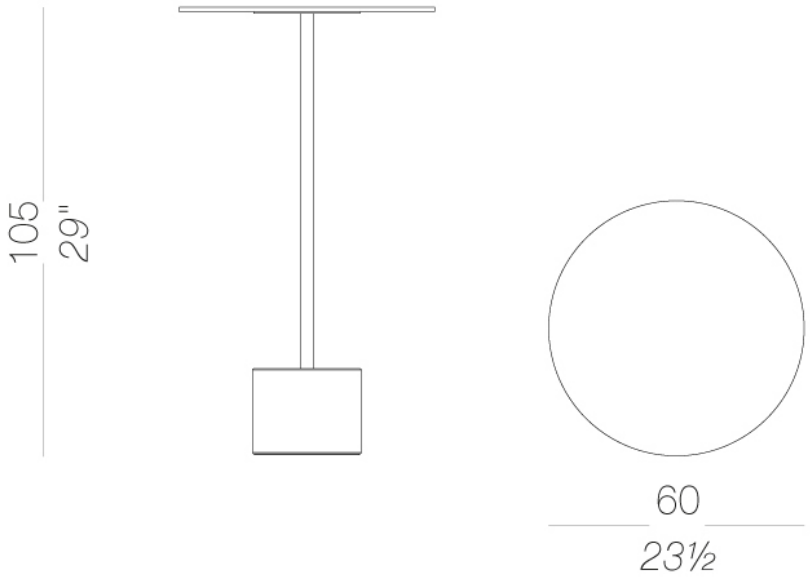

JEY | P383

Francesco Rota | 2016

base

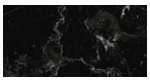

marble
marble
2 Colors

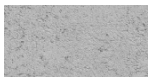

concrete
concrete
1 Colors

frame

powder coating
white
1 Colors

powder coating
black
1 Colors

top

HPL 10 mm
black HPL fenix
1 Colors

HPL 10 mm
white HPL fenix
1 Colors

HPL 10 mm
HPL fenix grigio
Londra
1 Colors

HPL 10 mm
HPL fenix rosso
Jaipur
1 Colors

HPL 10 mm
HPL fenix comodoro
1 Colors

JEY | P383

Francesco Rota | 2016

consult the porfolio for the range of colors, fabrics, eco-leather, soft-leather.

use and maintenance instructions
Clean all parts in wood, leather, fabric and metal with a damp cloth or a diluted neutral cleaner. Do not use cleaners with alcohol, bleach, solvent or abrasive products. Any liquid spilt on the product must be wiped up immediately.When lifting or moving the product, hold it on the structure and not under the seat. The product should not be subjected to unbalanced weights, as it is designed for a proper rest on the foothold (on four legs or on the base). Our company relieves from any responsibility in case of damage caused to fragile floors. Avoid any improper use of the product: do not step on the product, on the footrest or on the armrests. Avoid any movements that could compromise the proper functionality of the product or the safety of the users.Wood and leather, being natural materials, could be easily damaged. Small impurities or imperfections are within quality standard range.Do not expose the product to weather conditions or atmospheric agents, nor to heat sources over 40°C. Also products for outdoor use could be afflicted by atmospheric agents. The product could undergo possible exterior changes due to particular exposure to heat, humidity and saltiness. An appropriate and frequent maintenance and cleaning of the product enhances its durability. The product could change colour and shade, if exposed to direct sunlight. Maintenance has to be carried out by experienced staff. Dispose of the package only after assembling the product, in order to avoid the loss of ironmongery and components. Once the product has been dismantled, the product itself or its components must be given to the public garbage disposal system, according to the legislation in force.