FLOS

05.5920.14 Black

Workmates Track Small High Efficiency

Designed by FLOS Architectural, 2023

10W - 1033lm - 3000K - CRI> 90 - Beam° 66

Luminaire for use on The Running Magnet system. High-efficiency light source. This can rotate by 360° on the axis of its rear arm to reach any position relative to the track (from parallel to perpendicular). UGR<19. EN12464 - cd/m² @ 65º<3000 compliant. Casambi, máximum distance between fixtures: 50m.

Are you a professional and your project needs consulting and support?

BOOK AN APPOINTMENT

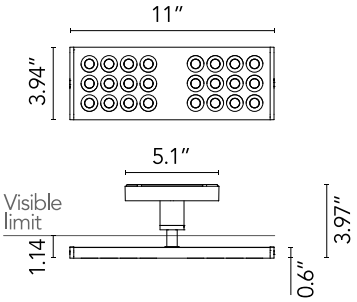

Main specifications

Mounting	Track
Environments	Indoor dry location
LED type	Top LED
Number of lamps	1
Power (W)	10
Source flux (lm)	1260
System flux (lm)	1033

Physical

Color	Black
Orientation	Fixed
Rotation (º)	360
Length (in)	280
IP internal	20

Download

Family spec sheet	ZIP
Mounting instructions	PDF

Photometric Files

LDT / IES	ZIP

Technical Drawings

2D	ZIP
3D	ZIP

RG IEC 62471

GWT 850º

IP 20

©2026 Flos - P.IVA 00290820174 - 8/14/2026

In our constantly evolving world and business, technical upgrades happen every day. This means all product specifications and data are subject to change without warning in order t improve reliability, function, performance or otherwise. We make every effort to ensure the accuracy of our product images, however due to different lighting and screens used for viewing, the colours may vary. Images are indicative of the quality and style of the product but may not represent the precise details of the product you receive. This is because we are constantly working to make improvements. For aesthetic reasons, cables and/or electrical elements are often not shown. Refer to technical data sheets for all technical data. Images and colours are not part of any contract or warranty in any way.

Schematic light drawing

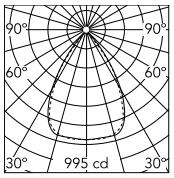

Luminous flux luminaire
1033 lm

Beam Angle: 66°

h(m)	E(lx)	D(m)
1	994	1.31
2	248	2.61
3	110	3.92
4	62	5.23
5	40	6.54

Ecodesign and Energy Labelling

This product contains a light source of energy efficiency class **G**

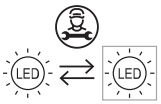

Replaceable (LED only) light source by a professional

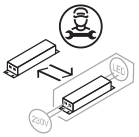

Replaceable control gear by a professional

Photometric

Lighting type	Direct
Light distribution	Symmetric
CCT (K)	3000
CRI>	90
Rf fidelity index	87
Rg gamut index	103
LED Life / Failure Ratio	L80B50>60.000h_Tc85ºC
Beam angle C0-180 (º)	66
Beam angle C90-270 (º)	65
Extreme cut off	Yes
UGRL	<16

Electrical

Insulation class	III
Main voltage (Vac)	24
Forward voltage (V)	12
LED current (mA)	700
Driver	Remote
Dimmable	No
Dimming type	Non Dimmable

Notes

Before placing your order, please consult the product details also on the catalogue, in its technical data sheet and in the installation and assembly instructions to find all the information that may not be included in this site or that could be relevant to your specific project or installation.

©2026 Flos - P.IVA 00290820174 - 8/14/2026

In our constantly evolving world and business, technical upgrades happen every day. This means all product specifications and data are subject to change without warning in order t improve reliability, function, performance or otherwise. We make every effort to ensure the accuracy of our product images, however due to different lighting and screens used for viewing, the colours may vary. Images are indicative of the quality and style of the product but may not represent the precise details of the product you receive. This is because we are constantly working to make improvements. For aesthetic reasons, cables and/or electrical elements are often not shown. Refer to technical data sheets for all technical data. Images and colours are not part of any contract or warranty in any way.

FLOS

05.5930.14 Black

Workmates Track Small Full Spectrum

Designed by FLOS Architectural, 2023

10W - 787lm - 3000K - CRI> 98 - Beam° 66

Luminaire for use on The Running Magnet system. High-efficiency light source. This can rotate by 360° on the axis of its rear arm to reach any position relative to the track (from parallel to perpendicular). UGR<19. EN12464 - cd/m² @ 65º<3000 compliant. Casambi, máximum distance between fixtures: 50m.

Are you a professional and your project needs consulting and support?

BOOK AN APPOINTMENT

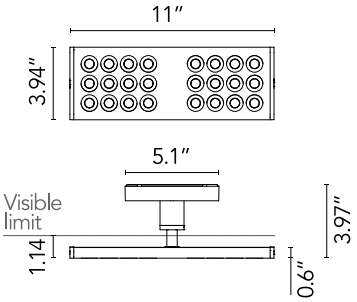

Main specifications

Mounting	Track
Environments	Indoor dry location
LED type	Top LED
Number of lamps	1
Power (W)	10
Source flux (lm)	934
System flux (lm)	787

Physical

Color	Black
Orientation	Fixed
Rotation (º)	360
Length (in)	280
IP internal	20

Download

Family spec sheet	ZIP
Mounting instructions	PDF

Photometric Files

LDT / IES	ZIP

Technical Drawings

2D	ZIP
3D	ZIP

RG IEC 62471

GWT 850º

IP 20

©2026 Flos - P.IVA 00290820174 - 8/14/2026

In our constantly evolving world and business, technical upgrades happen every day. This means all product specifications and data are subject to change without warning in order t improve reliability, function, performance or otherwise. We make every effort to ensure the accuracy of our product images, however due to different lighting and screens used for viewing, the colours may vary. Images are indicative of the quality and style of the product but may not represent the precise details of the product you receive. This is because we are constantly working to make improvements. For aesthetic reasons, cables and/or electrical elements are often not shown. Refer to technical data sheets for all technical data. Images and colours are not part of any contract or warranty in any way.

Schematic light drawing

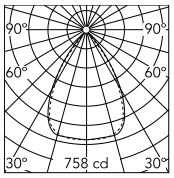

Luminous flux luminaire
787 lm

Beam Angle: 66°

h(m)	E(lx)	D(m)
1	757	1.31
2	189	2.61
3	84	3.92
4	47	5.23
5	30	6.54

Ecodesign and Energy Labelling

This product contains a light source of energy efficiency class **G**

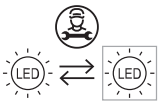

Replaceable (LED only) light source by a professional

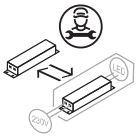

Replaceable control gear by a professional

Photometric

Lighting type	Direct
Light distribution	Symmetric
CCT (K)	3000
CRI>	98
Rf fidelity index	97
Rg gamut index	101
LED Life / Failure Ratio	L80B50>60.000h_Tc85ºC
Beam angle C0-180 (º)	66
Beam angle C90-270 (º)	65
Extreme cut off	Yes
UGRL	<16

Electrical

Insulation class	III
Main voltage (Vac)	24
Forward voltage (V)	12
LED current (mA)	700
Driver	Remote
Dimmable	No
Dimming type	Non Dimmable

Notes

Before placing your order, please consult the product details also on the catalogue, in its technical data sheet and in the installation and assembly instructions to find all the information that may not be included in this site or that could be relevant to your specific project or installation.

©2026 Flos - P.IVA 00290820174 - 8/14/2026

In our constantly evolving world and business, technical upgrades happen every day. This means all product specifications and data are subject to change without warning in order t improve reliability, function, performance or otherwise. We make every effort to ensure the accuracy of our product images, however due to different lighting and screens used for viewing, the colours may vary. Images are indicative of the quality and style of the product but may not represent the precise details of the product you receive. This is because we are constantly working to make improvements. For aesthetic reasons, cables and/or electrical elements are often not shown. Refer to technical data sheets for all technical data. Images and colours are not part of any contract or warranty in any way.