Luna coffee table

by Ramón Esteve

Luna channels the revolutionary spirit of design icons such as Verner Panton and Joe Colombo, known for their influential contributions to outdoor and contemporary furniture. Inspired by their pioneering work, the Luna collection fuses avant-garde materials with bold forms to epitomize the democratization of outdoor furniture, seamlessly blending functionality with striking aesthetics and a timeless elegance that redefines sophistication in contemporary furniture.

Info

Description

The Luna coffee table, created by Ramón Esteve, combines sustainability and innovative design with its 100% recyclable polyethylene and customisable HPL surface.

It features a hidden compartment that brings discreet and elegant functionality to any outdoor space.

Weight: 16 Kg

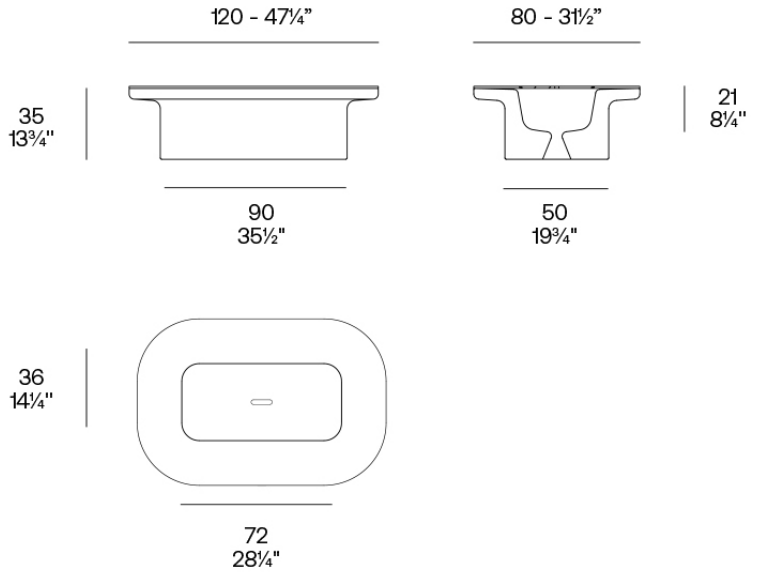

Luna. Mesa Almacenaje
Luna. Storage Table
54852

Finishes

finishes

Basic
Ref. 54852

Matt Polyethylene

Lacquered
Ref. 54852F

VONDOM

Lacquered Polyethylene

lighting

Led – White
Ref. 54852W

White internally lit unit with LED technology. Available only in matte ice white finish.

LED RGBW – Cable
Ref. 54852L

ice 2101

Unit with internal lighting with RGBW LED technology and remote control unit for switching colors. Available only in matte ice white finish. Remote control included.

LED RGBW DMX – Cable
Ref. 54852D

ice 2101

Unit with internal lighting with RGBW LED technology and remote control unit for switching colors. Also controlLED by DMX-1024 (wireless), enabling communication between one or more products simultaneously via the DMX transmitter (not included). There are two options to choose from: Professional XLR DMX and Home WIFI DMX. (Remote control included).
Optional battery

LED RGBW – Battery
Ref. 54852Y

ice 2101

Unit with internal lighting with battery-powered RGBW LED technology. Includes charger and remote control for switching colors and charger. Available only in matte ice white finish.
LED RGBW DMX – Battery

Ref. 54852DY

ice 2101

Unit with internal lighting with RGBW LED technology and remote control unit for switching colors. Also controlLED by DMX-1024 (wireless), enabling communication between one or more products simultaneously via the DMX transmitter (not included). There are two options to choose from: Professional XLR DMX and Home WIFI DMX. (Remote control included).

tabletops

HPL Solid Core Top
Ref. VVAR03872

white (white edge)
ecru
tortora
smoked
cream
camel
clay
garnet
brown
green
ocean
blue
gray
anthracite
white stone
cream stone
ecru stone
tortora stone
green stone
gray stone

VONDOM

black stone

oak1

oak2

walnut

HPL Black Edge Top
Ref. VVAR03872

white(black edge)

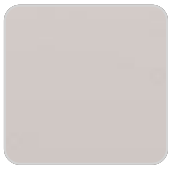
ecru(black edge)

black(black edge)

Ambients