BONALDO

Flac

Designer: Fabrice Berrux

Flac is the name of the new collection of coffee tables designed by Fabrice Berrux for Bonaldo, available in three heights and three diameters (Flac low, Flac medium, Flac high). The characterizing element is the fused and tempered glass top which gives the effect of the surface of water: the top floats on a slender metal base which almost appears to be the mounting for a precious stone. The different heights at which the tables are offered allow the creation of interesting compositions, characterized by a subtle interplay of superimpositions which highlight different shades of colour in the intersection of the glass.
In the medium and low versions, the top is also available in other materials, for a mix & match that make Flac a versatile and perfect element for every style.
The metal base features an cross-joint between the legs, an element of craftsmanship that enhances the lightweight design of the product.

Data sheet

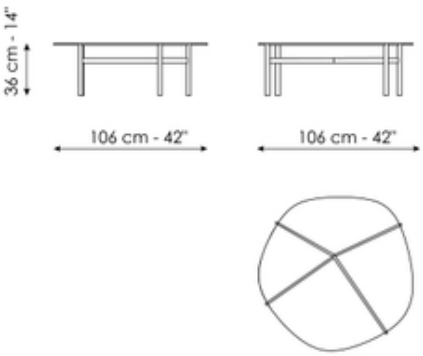

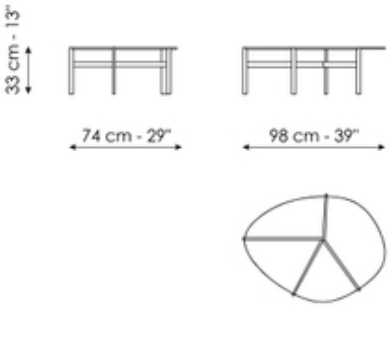

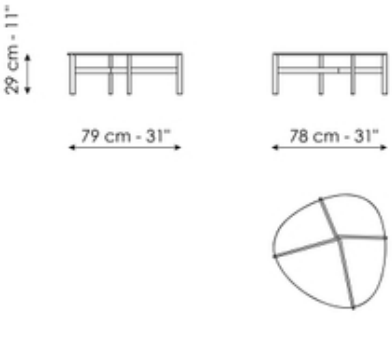

Flac high

Width: 106cm

Depth: 106cm

Height: 36cm

Flac medium

Width: 98cm

Depth: 74cm

Height: 33cm

Flac low

Width: 79cm

Depth: 78cm

Height: 29cm

Finishes

Top

Tempered cast glass
Bronzed

Tempered cast glass
Smoked

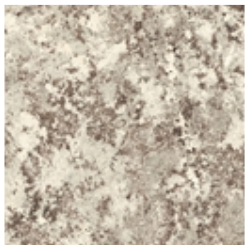

Mat ceramic
Alaska White

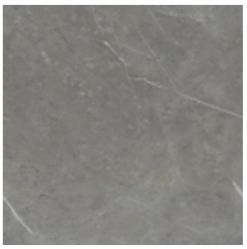

Mat ceramic
Ardesia grey

Mat ceramic
Augusta

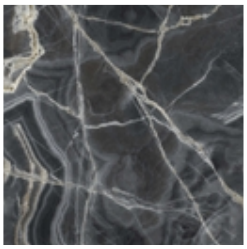

Glossy ceramic
Black Onyx

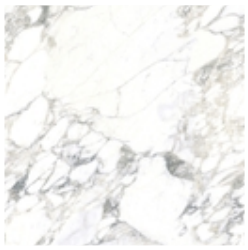

Glossy ceramic
Calacatta

Silk finish ceramic
Calacatta macchia vecchia

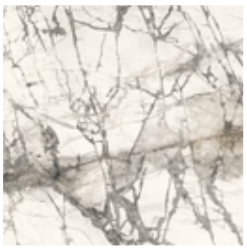

Glossy ceramic
Imperial grey

Mat ceramic
Laurent

Glossy ceramic
Mountain peak

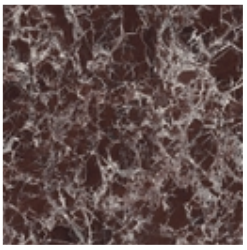

Glossy ceramic
Rosso imperiale

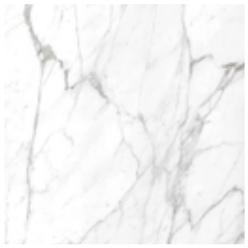

Marble
Calacatta

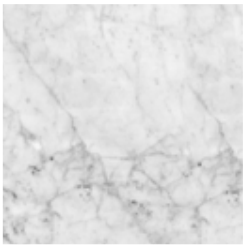

Marble
Carrara

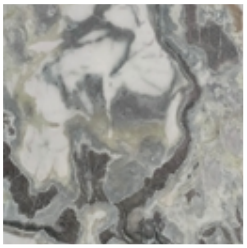

Marble
Dover White

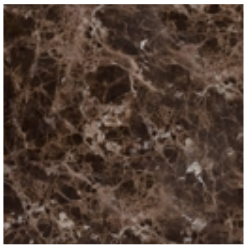

Marble
Emperador

Marble
Fior di bosco

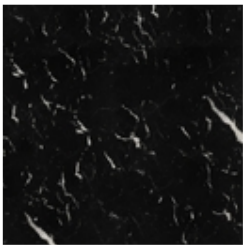

Marble
Marquinia

Marble
Rosso Carpazi

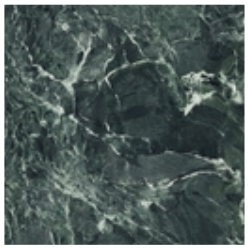

Marble
Saint Denis

Marble
Travertino Romano

Veneered wood
Walnut Canaletto

Veneered wood
Coal oak

Base

Painted metal
Mat bronze

Painted metal
Mat lead

Materials, fabrics, leathers, colors and finishes are approximate and may slightly differ from actual ones. You can find the complete collection of Bonaldo fabrics and leathers on the website https://bonaldo.biz