Agatha planter

by Agatha Ruiz de la Prada

Vondom introduces the Agatha Collection, created by Agatha Ruiz de la Prada, as their first Kids furniture collection, infused with a playful, youthful, and spontaneous feel. The designer's signature symbols are immediately recognizable in the kids furniture, characterized by their simple, charming, and elegant forms.

Info

Description

Pot made of polyethylene resin by rotational moulding. 100% Recyclable. Item suitable for indoor and outdoor use. Available in different finishes.

Weight: 12 Kg

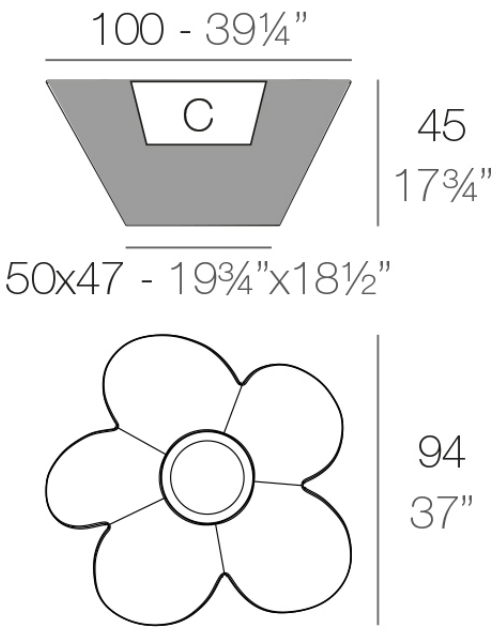

AGATHA Macetero C = 54 L
AGATHA Planter C = 14¼ gal

Finishes

finishes

Basic
Ref. 52003A

Matt Polyethylene

Lacquered
Ref. 52003F

VONDOM

white 3101

black 3102

ecru 3103

tortora 3104

gray 3105

anthracite 3106

garnet 3113

green 3116

cream 3117

blue 3118

brown 3125

Lacquered Polyethylene

TWO TONE – Lacquered
Ref. 52003FP

white/red

Two-tone lacquered Polyethylene

plato

Ref. 42769

VONDOM

white 2001	black 2002	ecru 2003	tortora 2004	gray 2005
anthracite 2006	brown 2008	garnet 2015	green 2016	cream 2017
blue 2018	camel 2020	clay 2022	ecru granite	cream granite
ice 2101				

VONDOM

Ambients