OORT | Lower back cushion

Francesco Rota | 2017

OORT

Francesco Rota | 2017

The colours are those of the sky, of rocks and a flowering moorland. The shapes are those of contemporary sober elegance. OORT cushions add character to each chair and sofa while pleasantly supporting the back. It is an invitation to take a very soft break and a moment later, thanks to the special fibre of the padding, each element regains the freshness of the first encounter.

OORT

Francesco Rota | 2017

| Lower back cushion removable cover 40x25 | 60x25

Cushions in microfiber of hypoallergenic and water repellent polyester with protective water-resistant and breathable fabric layer and finished with UV stable outdoor removable fabric.

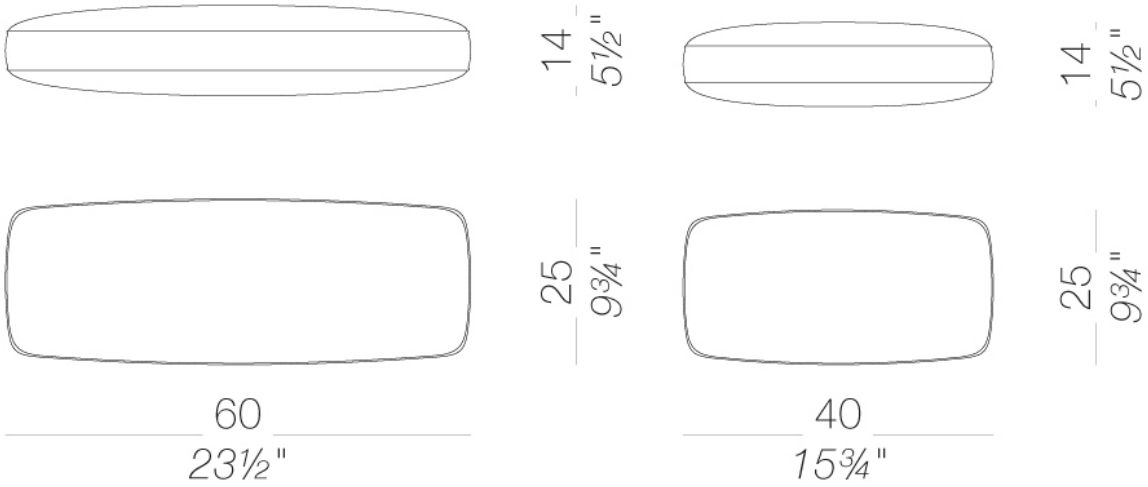

OORT | Lower back cushion

Francesco Rota | 2017

upholstery

fabric
Panama - Grade. A
48 Colors

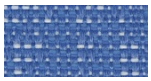

fabric
Atrium - Grade. C
16 Colors

fabric
Sorrento - Grade. B
22 Colors

fabric
Iris - Grade B
34 Colors

OORT | Lower back cushion

Francesco Rota | 2017

consult the folder of materials for the range of colors and fabrics

use and maintenance instructions
Outdoor fabrics are lined unglued, therefore any creasing in the upholstery is an inevitable consequence of use and cannot be considered grounds for any claims. To prolong the life of the product, clean the surfaces regularly, dry them with a clean cloth and remove any stagnant water, especially if exposed in locations with a high level of humidity or a marine climate.
When not in use, we recommend storing in sheltered places and covering with waterproof protection. In this case, it is advisable to remove the cover and ventilate the product frequently and regularly to avoid the onset of any mould or stains due to damp.
THE WARRANTY WILL NOT COVER DEFECTS OR IMPERFECTIONS RESULTING FROM THE PASSAGE OF TIME OR TO WEAR AND TEAR DUE TO THE NORMAL USE OF THE PRODUCT.