Sticks

Design by Arik Levy

Fusing technology, space, and architecture, Sticks offers a creative toolkit for integrating light elements in an interior. Pure and graphic, the minimalist aluminum rods transform linear light into floating sculpture.

Application:
Pendant, Wall, Ceiling, Floor

Installation type:
Depends on selected installation accesory (see page 5).

Diffuser:
Polycarbonate.

Materials:
Sticks: Aluminum.

Finish:
11 Black (NCS S 8500-N)

Driver and **Dimming:**
Depends on selected installation accesory (see page 5).

Personalization options available

- Extra cable length: Pendant sticks.

Min. quantity, upcharge and extra lead time apply.

Installation and assembly:
Please, see the installation manual.

www.vibia.com ▶ Professional area
and together with the product you'll receive a personalized installation guide with all the details of your composition and guidance for its correct and easy installation.

Light distribution:
General lighting: Lamp for general lighting that equally distributes the light in all directions.

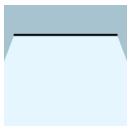

Certificates:
LED IP20 Dimmer

Sticks

Design by Arik Levy

Connecting space application

Custom configurations include ceiling-to-ceiling, wall-to-wall, floor-to-wall, wall-to-ceiling, or suspended from the ceiling into open space. Through their physical form and the light they cast, they create and disrupt architectural planes.

Connectable

The Sticks collection has three sizes: 59″, 78 3/4″, or 118″, and they can be connected to each other to a total maximum lenght of 177 inches per electrical connection.

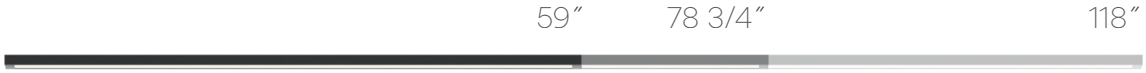

Sticks are connected one to each other with a 6 inch length cord.

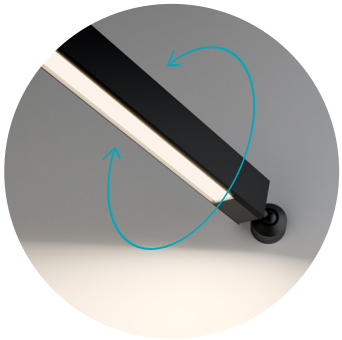

Each stick rotates on its own axis, allowing light to be directed precisely where needed.

Sticks

Design by Arik Levy

Wall-Wall / Ceiling-Ceiling

Wall-Wall (corner) / Wall-Ceiling

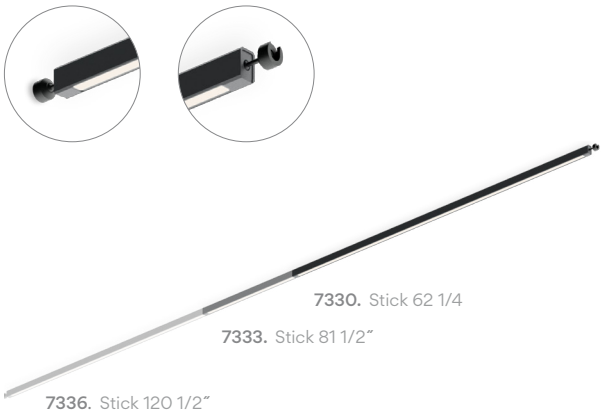

Wall-Pendant

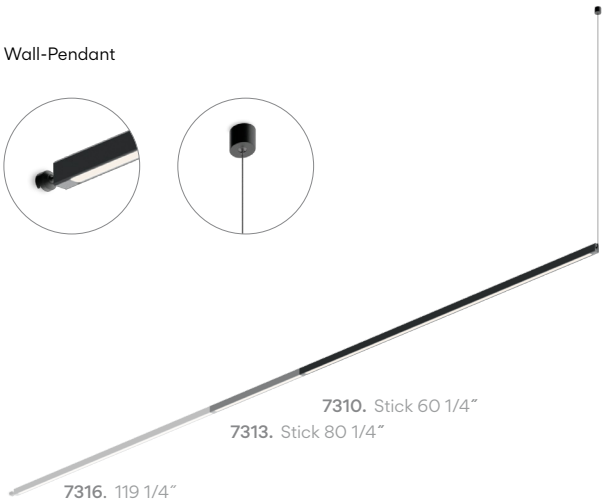

Pendant-Pendant

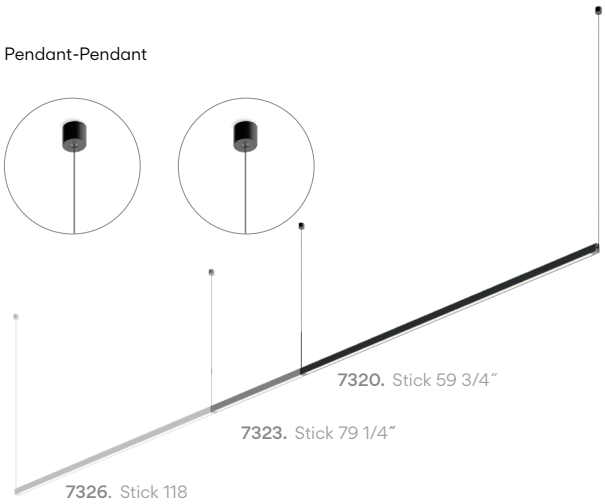

Pendant

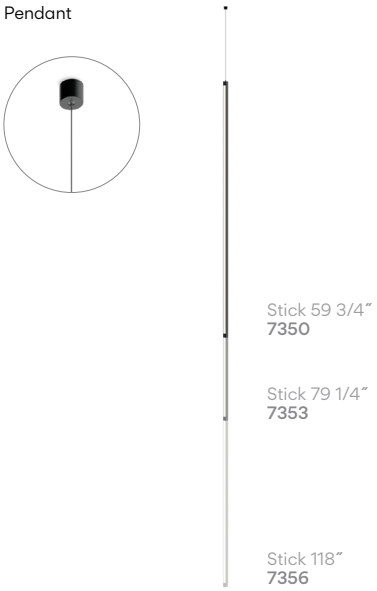

Floor-Wall

Sticks

Design by Arik Levy

Elements to be configurated

Wall-Wall / Ceiling-Ceiling
Wall-Wall (corner) / Wall-Ceiling
Wall-Pendant
Ceiling-Pendant
Pendant-Pendant
Pendant

Sticks 59-inch (1.5m).
7300 7310 7320 7330 7350

1 x LED STRIP 26.4 W 24V.
/1 M 2700 K. CRI >90. 3260 lm. 123 lm/W.
/2M 3000 K. CRI >90.
/3 M 3500 K. CRI >90. 3535 lm. 134 lm/W.

Sticks 78-inch (2m).
7303 7313 7323 7333 7353

1 x LED STRIP 35.2 W 24V
/1 M 2700 K. CRI >90. 4346 lm. 123 lm/W.
/2M 3000 K. CRI >90.
/3 M 3500 K. CRI >90. 4714 lm. 134 lm/W.

Sticks 118-inch (3m).
7306 7316 7326 7336 7356

1 x LED STRIP 52.8 W 24V.
/1 M 2700 K. CRI >90. 6519 lm. 123 lm/W.
/2M 3000 K. CRI >90.
/3 M 3500 K. CRI >90. 7071 lm. 134 lm/W.

Horizontal Hanging version with a UGR index <19 available.
Request more information.

Sticks: Aluminum.
Diffuser: Polycarbonate.

Driver and **Dimming** depends on selected installation accesory (see page 5).

Suspension cables up to 118-inch (3m) for (Wall - Pendant) and (Pendant - Pendant).

Personalization options available
- Extra cable length for (Wall - Pendant) and (Pendant - Pendant). Request more information.

LED IP20 Dimmer

Floor-Wall

Sticks 59-inch (1.5m).
7340

1 x LED STRIP 26.4 W 24V
/1 M 2700 K. CRI >90. 3260 lm. 123 lm/W.
/2M 3000 K. CRI >90.
/3 M 3500 K. CRI >90. 3535 lm. 134 lm/W.

Sticks 78-inch (2m).
7343

1 x LED STRIP 35.2 W 24V.
/1 M 2700 K. CRI >90. 4346 lm. 123 lm/W.
/2M 3000 K. CRI >90.
/3 M 3500 K. CRI >90. 4714 lm. 134 lm/W.

Sticks 118-inch (3m).
7346

1 x LED STRIP 52.8 W 24V.
/1 M 2700 K. CRI >90. 6519 lm. 123 lm/W.
/2M 3000 K. CRI >90.
/3 M 3500 K. CRI >90. 7071 lm. 134 lm/W.

Sticks: Aluminum.
Diffuser: Polycarbonate.

Driver and **Dimming** depends on selected installation accesory (see page 5).

LED IP20 Dimmer

Sticks

Design by Arik Levy

Installation types

Floor base & plug

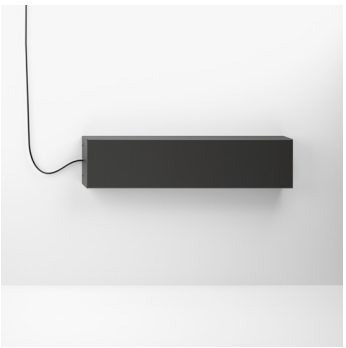

Surface canopy

Remote driver recessed micro canopy

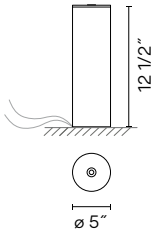

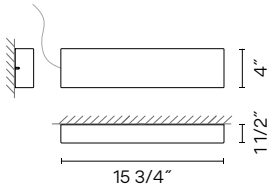

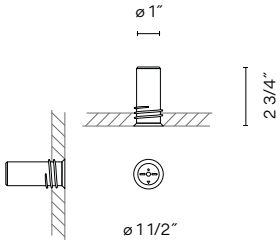

Floor base & plug
ACST000226

Driver Constant Voltage 24V.
90~305V. 50/60Hz
Dimming: Push.

Materials
Body: Steel.

11 Black
(NCS S 8500-N)

IP20 PUSH

Surface canopy
ACST000227 ACST000230

Driver Constant Voltage 24V.
90~305V. 50/60Hz
Dimming: 1-10V.

Personalization options available
- Dimming: DALI.
Request more information.

Materials
Body: Steel.

11 Black
(NCS S 8500-N)

IP20 1-10V Multi-volt

Remote driver recessed micro canopy
ACST000228 ACST000235

Driver Constant Voltage 24V.
90~305V. 50/60Hz.
Dimming: 1-10V.

Personalization options available
- Dimming: DALI, TRIAC.
Request more information.

Materials
Body: Aluminum.

11 Black
(NCS S 8500-N)

IP20 1-10V Multi-volt

VIBIA, INC.

USA & CANADA
272 Fernwood Ave.
Edison, NJ 08837. USA
Phone 732 417 1700.

sales@vibia.com
www.vibia.com/us/usa

HEADQUARTERS
Progrés 4-6.
08850 Gavà
(Barcelona - Spain)