ARKETIPO / INDOOR

SOFA THAT'S LIFE

designed by Mauro Lipparini 2021

STRUCTURE: wood.
FRAME UPHOLSTERY: multi-density expanded polyurethane (D30 + D40) covered with synthetic lining 230gr and coupled synthetic lining 6mm.
SEAT UPHOLSTERY: expanded polyurethane D30 and memory foam covered with synthetic lining 200gr.
BACK CUSHION UPHOLSTERY: downproof 100% cotton cover filled with virgin feathers and inner core in expanded polyurethane (D18/M).
SPRINGING: elastic belts.
SEAT HEIGHT: 42 cm.
ARM HEIGHT: 62cm.
FEET: metal, finishes: black nickel or varnished micaceous brown, h. 13 cm

Composition "P" (left unit 228 cm + left corner sofa 231 cm + 1 back cushion "Modern" 70 cm + 3 back cushions "Modern" 90 cm + 2 backrest rolls + 1 side table arm 571060413 eucalyptus or Zebrano + 1 small table arm 571060207 eucalyptus or Zebrano + 1 back table 571060309 eucalyptus or Zebrano)

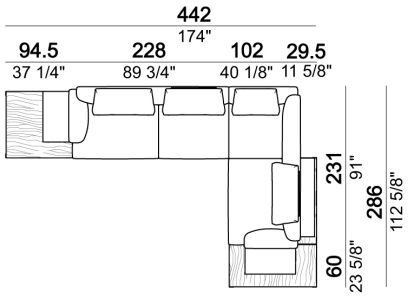

Composition "E" (right unit 128 cm + left corner unit 201 cm + central unit 200 cm with left pouf + 1 back cushion "Modern" 70 cm + 3 back cushions "Modern" 90 cm + 3 backrest rolls)

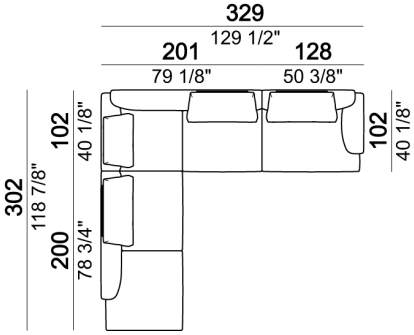

Composition "Q" (left unit 228 cm + left corner sofa 231 cm + 1 back cushion "Modern" 70 cm + 3 back cushions "Modern" 90 cm + 2 backrest rolls + 1 small table arm 571060208 eucalyptus or Zebrano + 1 back table 571060310 eucalyptus or Zebrano + 1 side table arm 571060412 eucalyptus or Zebrano)

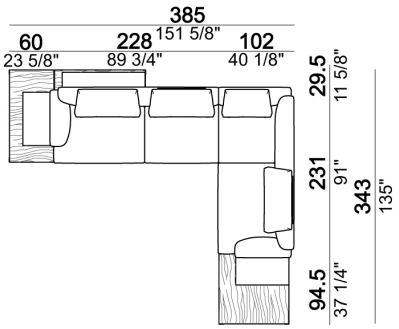

Central unit

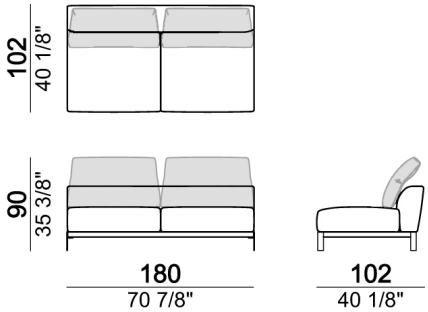

Dormeuse

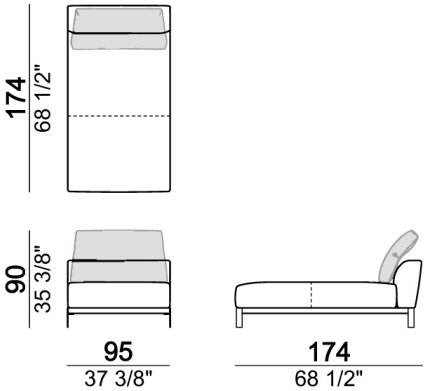

Pouf

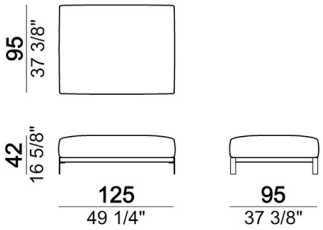

1) Type "Modern" with trapezoidal shape. 2) Type "Classic" with rectangular shape.

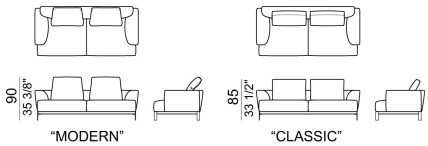

Composition "D" (left unit 208 cm + chaise-longue 128x174 cm with right short arm + 2 back cushions "Modern" 80 cm + 1 back cushion "Modern" 90 cm + 2 backrest rolls + 1 side table seat 571060208 eucalyptus or Zebrano + 1 back table 571060310 eucalyptus or Zebrano)

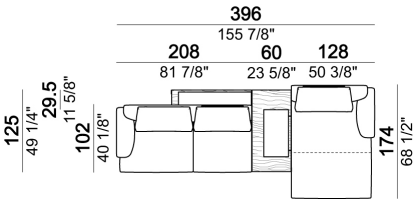

Composition "L" (left unit 228 cm + dormeuse 95x174 cm + right unit 208 cm + 3 back cushions "Modern" 80 cm + 2 back cushions "Modern" 90 cm + 3 backrest rolls).

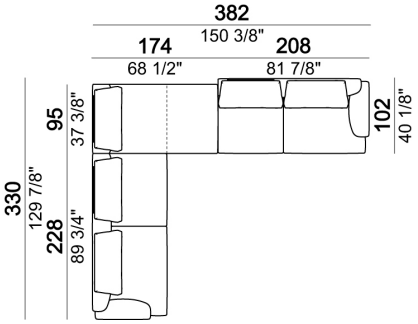

Right or left unit

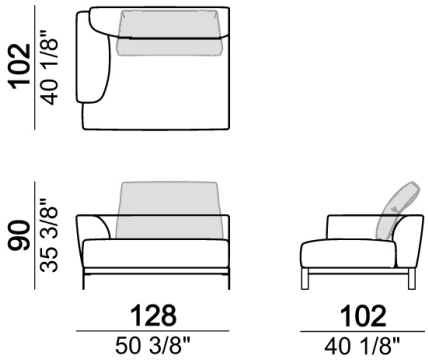

Composition "F" (right unit 128 cm + left corner unit 201 cm + central unit 200 cm with left pouf + 1 back cushion "Modern" 70 cm + 3 back cushions "Modern" 90 cm + 3 backrest rolls + 1 side table seat 571060207 eucalyptus or Zebrano + 1 back table 571060310 eucalyptus or Zebrano).

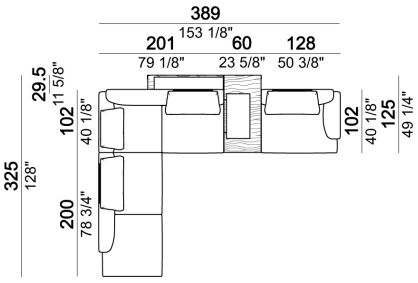

Back cushion "Modern"

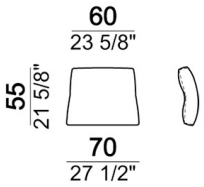

Central unit

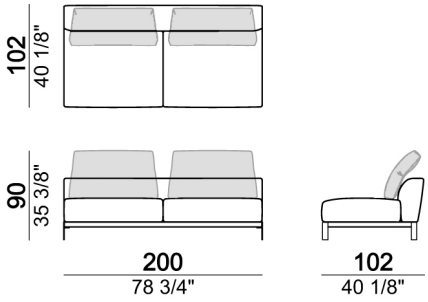

Composition "C" (left unit 208 cm + chaise-longue 128x174 cm with right short arm + 2 back cushions "Modern" 80 cm + 1 back cushion "Modern" 90 cm + 2 backrest rolls + 1 side table seat 57106105 eucalyptus or Zebrano)

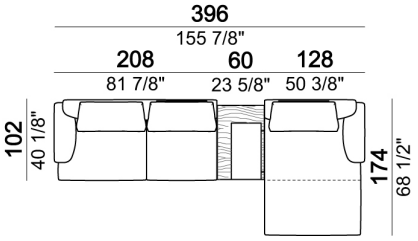

Composition "S" (Sofa 236 cm + 2 back cushions "Classic" 80 cm + 1 backrest roll + 1 small table arm 571060105)

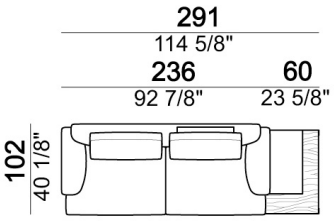

Right or left unit

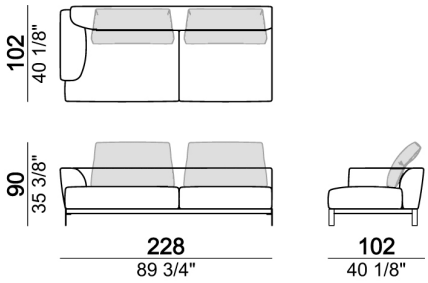

Armchair

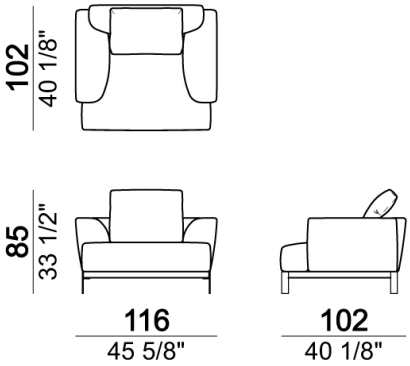

Right or left unit

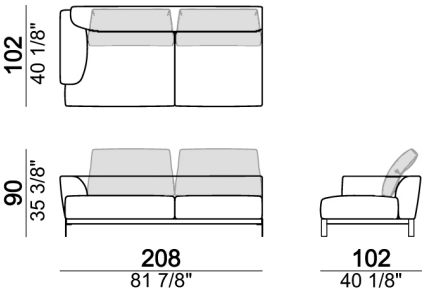

Right or left corner unit

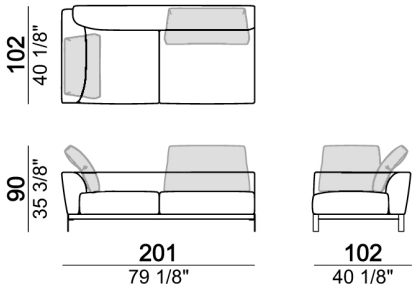

Backrest roll

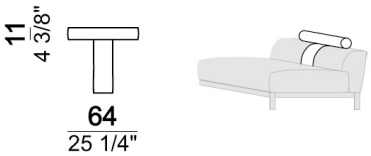

Composition "B" (left unit 208 cm + chaise-longue 128x174 cm with right short arm + 2 back cushions "Modern" 80 cm + 1 back cushions "Modern" 90 cm + 2 backrest rolls)

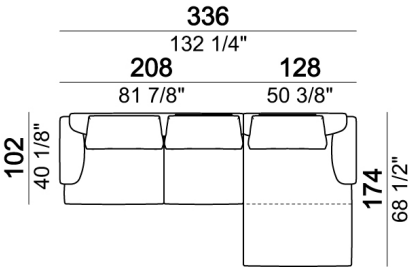

Composition "R" (left unit 228 cm + left corner sofa 231 cm + 1 back cushion "Classic" 70 cm + 3 back cushions "Classic" 90 cm + 2 backrest rolls + 1 small table arm 571060208 eucalyptus or Zebrano + 1 back table 571060310 eucalyptus or Zebrano + 1 side table arm 571060412 eucalyptus or Zebrano)

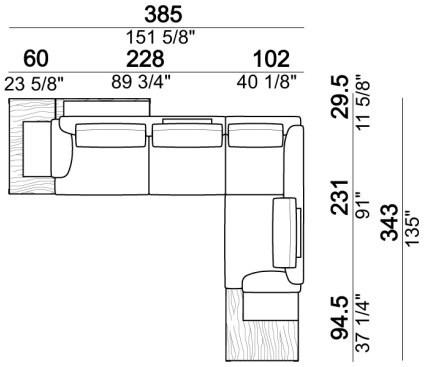

Right or left corner sofa

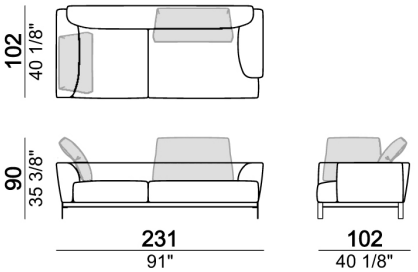

Back cushion "Modern"

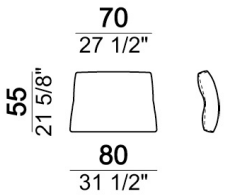

Composition "O" (left unit 228 cm + left corner sofa 231 cm + 1 back cushion "Modern" 70 cm + 3 back cushions "Modern" 90 cm + 2 backrest rolls + 1 small table arm 571060208 eucalyptus or Zebrano + 1 back table 571060310 eucalyptus or Zebrano + 1 side table arm 571060105 eucalyptus or Zebrano)

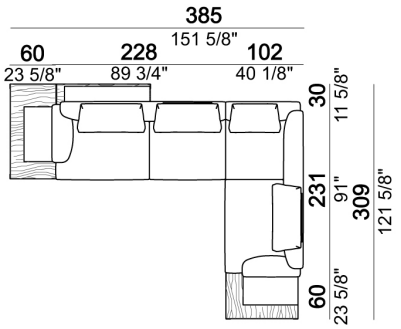

Back cushion "Classic"

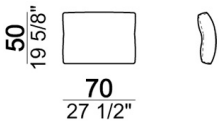

Composition "T" (left unit 208 cm + chaise-longue 128x174 cm with right short arm + 2 back cushions "Classic" 80 cm + 1 back cushion "Classic" 90 cm + 2 backrest rolls)

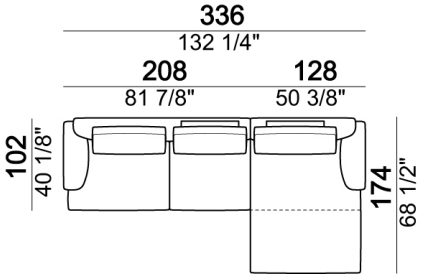

Pouf

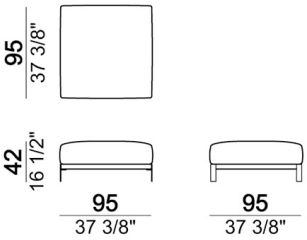

Central unit

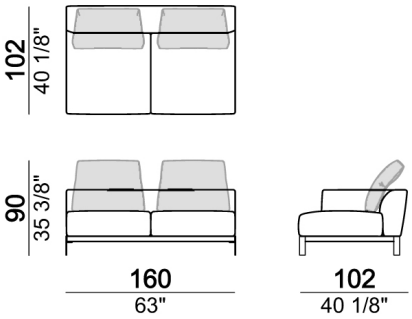

Chaise-longue with right or left short arm

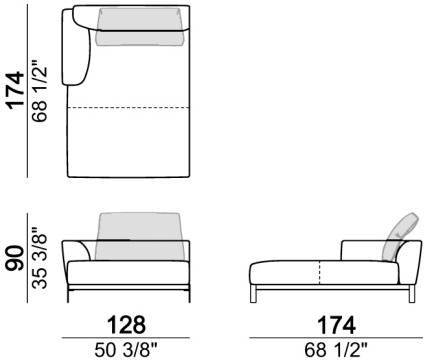

Back cushion "Classic"

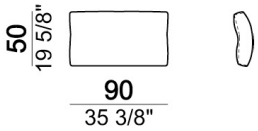

Back cushion "Modern"

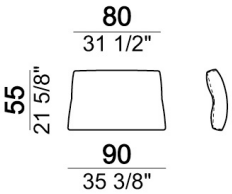

Composition "G" (left unit 208 cm + left corner unit 201 cm + right unit 128 cm + 2 back cushions "Modern" 80 cm + 1 back cushion "Modern" 70 cm + 2 back cushions "Modern" 90 cm + 3 backrest rolls).

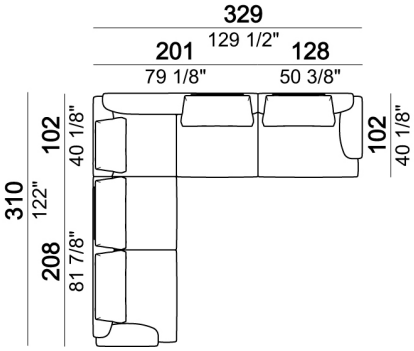

Central unit with right or left pouf

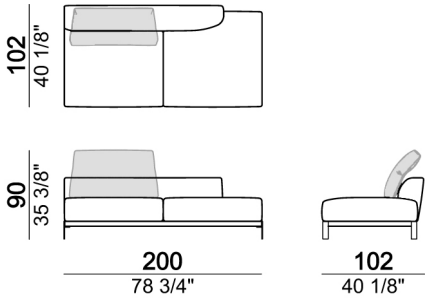

Composition "A" (sofa 256 cm + 2 back cushions "Modern" 90 cm + 1 backrest roll, 1 side table arm 571060207 eucalyptus or Zebrano + 1 back table 571060309 eucalyptus or Zebrano)

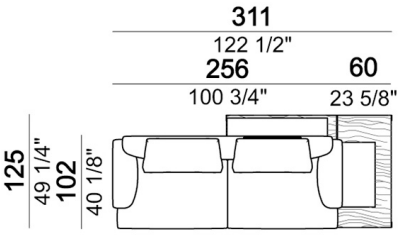

Composition "H" (left unit 208 cm + left corner unit 201 cm + right unit 128 cm + 2 back cushions "Modern" 80 cm + 1 back cushion "Modern" 70 cm + 2 back cushions "Modern" 90 cm + 3 backrest rolls + 1 side table arm 571060208 eucalyptus or Zebrano + 1 back table 571060309 eucalyptus or Zebrano + 1 back table 571060310 eucalyptus or Zebrano + 1 side table seat 571060106 eucalyptus or Zebrano).

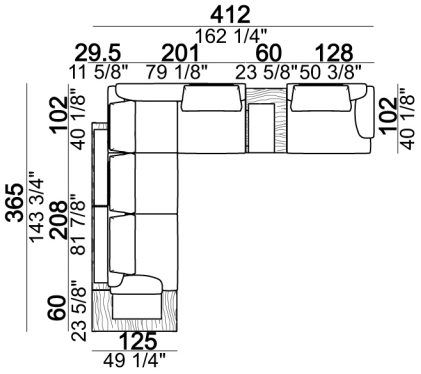

Composition "N" (left unit 228 cm + left corner sofa 231 cm + 1 back cushion "Modern" 70 cm + 3 back cushions "Modern" 90 cm + 2 backrest rolls)

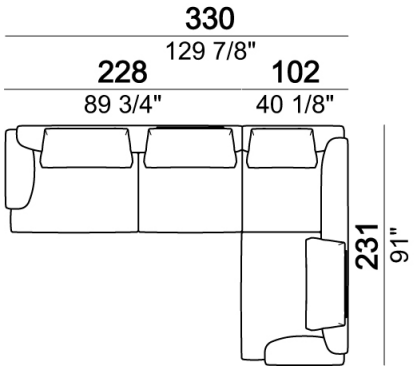

Sofa

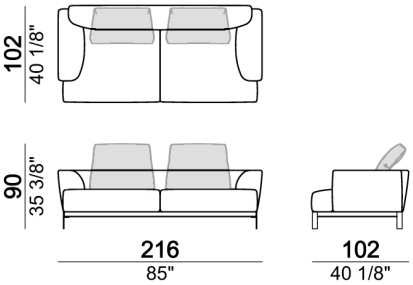

Sofa

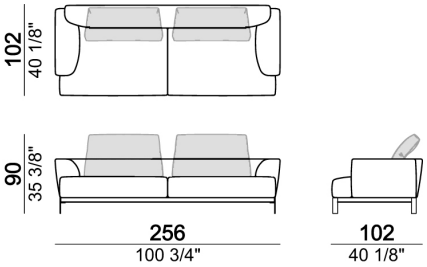

Back cushion "Classic"

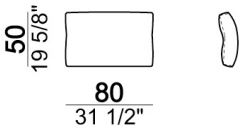

Central unit

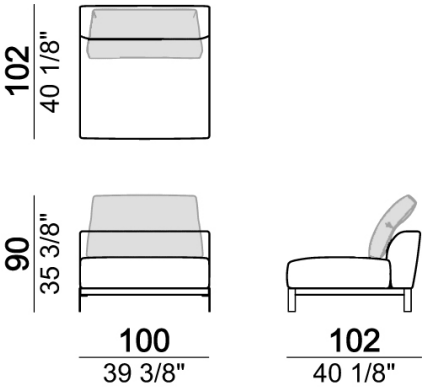

Right or left unit

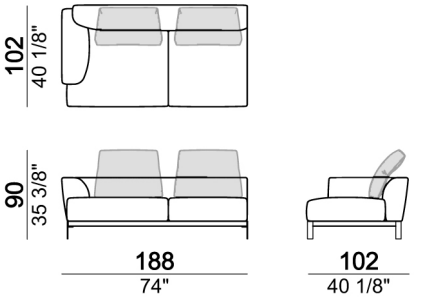

Composition "M" (left unit 228 cm + dormeuse 95x174 cm + right unit 208 cm + 3 back cushions "Modern" 80 cm + 2 back cushions "Modern" 90 cm + 3 backrest rolls + 1 side table arm 571060106 eucalyptus or Zebrano + 1 back table 5710603 eucalyptus or Zebrano + 1 small table arm 571060207 eucalyptus or Zebrano + 1 back table 571060309 eucalyptus or Zebrano).

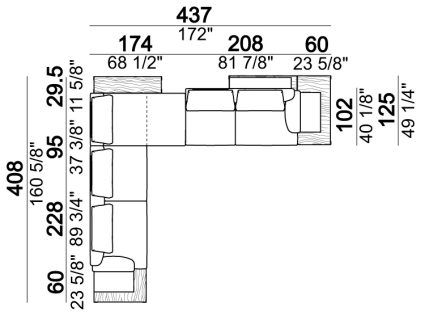
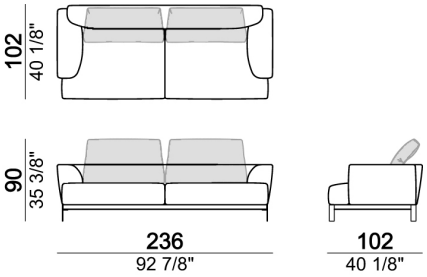
Sofa