Vertex table 50×50 hpl

by Karim Rashid

KARIM RASHID's latest masterpiece can be witnessed in **VERTEX** – a range of contemporary and sculpted outdoor and indoor designer furniture collection created exclusively for the Spanish brand **VONDOM**.

Info

Description

Made of polyethylene resin by rotational moulding. 100% Recyclable. Item suitable for indoor and outdoor use. Available in different finishes.

Weight: 21.41 Kg

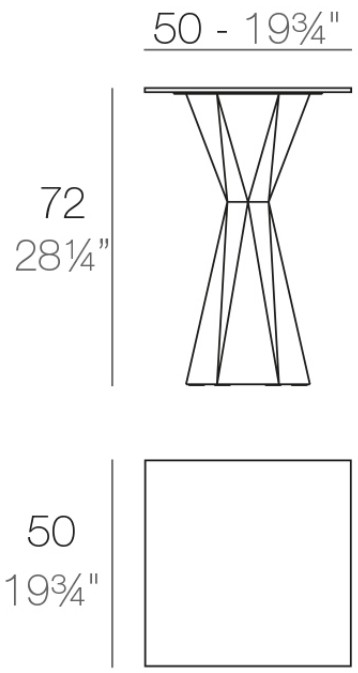

VERTEX Mesa 50x50
VERTEX Table 19¾"x19¾"

Finishes

finishes

Basic
Ref. 51017C

white 2001

black 2002

tortora 2004

anthracite 2006

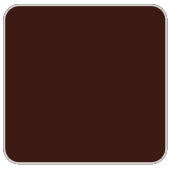
garnet 2015

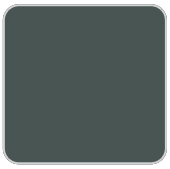
green 2016

cream 2017

blue 2018

Matt Polyethylene

Lacquered
Ref. 51017CF

white 3101

black 3102

ecru 3103

tortora 3104

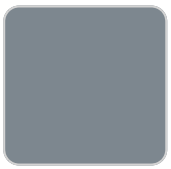
gray 3105

anthracite 3106

garnet 3113

green 3116

cream 3117

blue 3118

brown 3125

Lacquered Polyethylene

lighting

Led – White
Ref. 51017CW

ice 2101

White internally lit unit with LED technology. Available only in matte ice white finish.

LED RGBW – Cable
Ref. 51017CL

ice 2101

Unit with internal lighting with RGBW LED technology and remote control unit for switching colors. Available only in matte ice white finish. Remote control included.

LED RGBW DMX – Cable
Ref. 51017CD

ice 2101

Unit with internal lighting with RGBW LED technology and remote control unit for switching colors. Also controlLED by DMX-1024 (wireless), enabling communication between one or more products simultaneously via the DMX transmitter (not included). There are two options to choose from: Professional XLR DMX and Home WIFI DMX. (Remote control included).
Optional battery

LED RGBW – Battery
Ref. 51017CY

ice 2101

Unit with internal lighting with battery-powered RGBW LED technology. Includes charger and remote control for switching colors and charger. Available only in matte ice white finish.

LED RGBW DMX – Battery
Ref. 51017CDY

ice 2101

Unit with internal lighting with RGBW LED technology and remote control unit for switching colors. Also controlLED by DMX-1024 (wireless), enabling communication between one or more products simultaneously via the DMX

transmitter (not included). There are two options to choose from: Professional XLR DMX and Home WIFI DMX. (Remote control included).

tabletops

HPL Black Edge Top
Ref. VVAR00038

white(black edge)

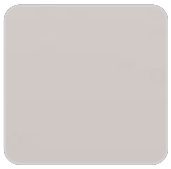
ecru(black edge)

black(black edge)

HPL Solid Core Top
Ref. VVAR00242

white (white edge)

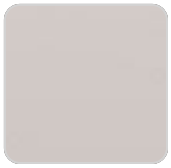
ecru

tortora

smoked

cream

garnet

brown

green

blue

anthracite

white stone

ecru stone

tortora stone

gray stone

black stone

oak1

oak2