emeco
Product Fact Sheet

1006 NAVY CHAIR & ARMCHAIR

By Emeco, 1944

The original. The 1006 Navy was originally created in 1944 for the US Navy as a lightweight, non-corrosive, fire resistant and super strong chair for ships and submarines. Still built by hand from recycled aluminum in Hanover, Pennsylvania. A timeless American design classic, at home anywhere. Lifetime warranty.

Features:

- Outdoor approved (hand brushed aluminum)
- Made from 80% recycled aluminum
- Carbon footprint declared
- Quick Ship: Delivery in 1-2 weeks (maximum order quantity 30 pieces)
- Made in USA
- Lifetime warranty

Material: 80% recycled aluminum.

Standard glides: Plastic TPU, for all floor surfaces including outdoor use.

Optional glides available:
Hard plastic glides for carpeted floors. Outdoor approved.
Hard plastic glides with felt inserts for hard floors.
Original Navy metal glides with hard plastic caps, for all-round use. Outdoor approved.

Finishes:

- Hand brushed aluminum
- Hand polished aluminum

Dimensions:

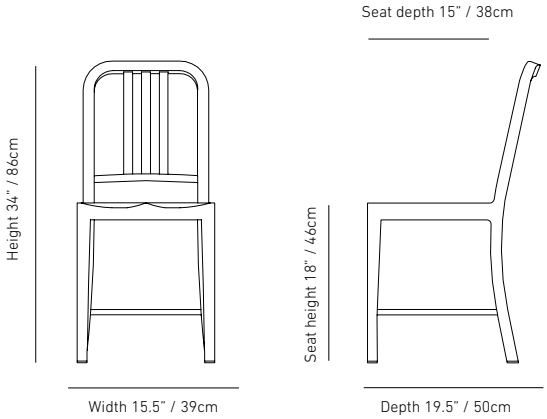

Weight: 7lb / 3.18kg

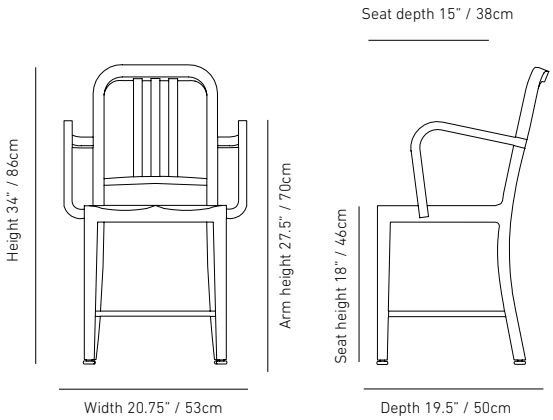

Weight: 8.5lb / 3.86kg

emeco.net · 805 West Elm Avenue, Hanover, Pennsylvania 17331, USA

emeco
Product Fact Sheet

1006 NAVY CHAIR & ARMCHAIR

By Emeco, 1944

Warranty:

Indoor:	Lifetime (150 years), excl. glides
Outdoor:	Lifetime, (150 years), excl. glides (handbrushed aluminum only)

Certified:

Strength & Stability:	ANSI/BIFMA x5.1
Flammability:	Aluminum is naturally fireproof
VOC:	ANSI/BIFMA e3-2019, Sections 7.6.1, 7.6.2, 7.6.3

Carbon Footprint: from 14.88kg CO2e

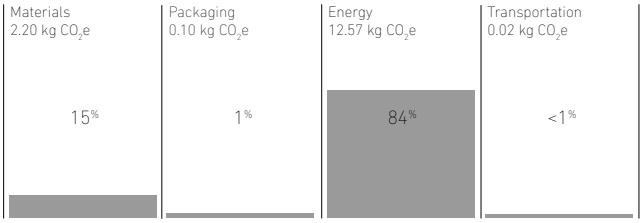

Verified carbon footprint for 1006 Navy chair using the 2030 Calculator.

Materials:

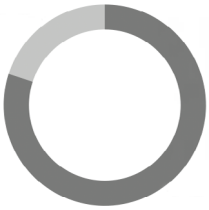

- Recycled aluminum, 80 % (50% post-consumer, 50% post-industrial)
- Virgin aluminum 20%

Recyclability:

The 1006 Navy comes with a 150-year warranty and a long life expectancy. Should the need for recycling arise, aluminum is 100% recyclable and can be recycled endlessly.

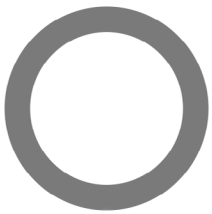

Health Product Declaration (HPD): disclosed to 1000 ppm.

Potential LEED and WELL contributions:

Emeco products contribute to a number of LEED Credits:

LEED BD + C (Building Design and Construction) and ID+C (Interior Design and Construction):

✓ CREDIT CATEGORY: MATERIALS AND RESOURCES
- Sourcing of Raw Materials
- Material Ingredients
- Furniture and Medical Furnishings (only applies to LEED BD+C: Healthcare)
- Construction and Demolition Waste Management

✓ CREDIT CATEGORY: INDOOR ENVIRONMENTAL QUALITY
- Low-Emitting Materials

Emeco products contribute to WELL v2 certification for the following features:

✓ Concept Materials: Feature X07 Material Transparency (Part 1,2, 3)

✓ Concept Materials: Feature: X07 Material Optimization (Part 1)

✓ Concept Innovation: Feature: I06 Carbon Disclosure and Reduction (Part 1)

✓ Emeco products may also contribute to WELL Concepts Air, Light and Thermal Comfort.

Downloads & More Information:

Download Certificates and HPD

Download LEED & WELL information

More Carbon Footprint information

emeco.net · 805 West Elm Avenue, Hanover, Pennsylvania 17331, USA

emeco
Product Fact Sheet

1006 NAVY CHAIR & ARMCHAIR

By Emeco, 1944

Requires Assembly:
No. Delivered fully assembled.

Shipping Dimensions:
1 item per box (WxHxD, weight): 22x20x37, 14lb
2 items per box (WxHxD, weight): 26x18x40, 21lb

Packaging materials:
Outer Packaging: Recycled cardboard.
Inner Packaging: Recycled cardboard, recycled plastic and PE foam.
The packaging material is 100% recyclable.

Country of origin:
USA (stated on packaging)

Care & Maintenance:
Longevity is an important part of sustainability. All Emeco furniture is designed and built for a long life. To keep the 1006 Navy chair looking good over time, follow our care advice.

Replacement parts:
The 1006 Navy chair is welded together into one piece, with no wearing parts. The plastic glides can be replaced to extend the product's lifecycle. The plastic caps on the metal glides may also be replaced.

Available models, related collections & accessories:

1006 NAVY BARSTOOL

1006 NAVY BARSTOOL WITH ARMS

1006 NAVY COUNTER STOOL

1006 NAVY COUNTER STOOL WITH ARMS

1006 NAVY MINI CHAIR

SEAT PADS

1104 NAVY

111 NAVY

111 NAVY BARSTOOL

111 NAVY COUNTER STOOL

111 NAVY MINI CHAIR

NAVY WOOD

NAVY OFFICER

emeco.net · 805 West Elm Avenue, Hanover, Pennsylvania 17331, USA